# Contents

General Information..... 4 - 5

**Electromagnetic Clutches - 3 daNm**

Series 30900-1 30900-2..... 6 - 7
Series 30900-1N 30900-2N..... 8 - 9
Series 30900-1N1 30900-2N1..... 10 - 11

**Electromagnetic Clutches - 10 daNm**

Series 30933 30934..... 12 - 13
Series 30901 30903..... 14 - 15
Series 30901-1/7 30903-1/7..... 16 - 17

**Electromagnetic Clutches - 14 daNm**

Series 30929 30930..... 18 - 19
Series 30980 30981..... 20 - 21
Series 30929-1/7 30930-1/7..... 22 - 23

**Electromagnetic Clutches - 21 daNm**

Series 30990 30991..... 24 - 25

**Electromagnetic Clutches - 30 daNm**

Series 30940/SF 30941/SF..... 26 - 28

Flanges..... 29 - 30

## General Information

### Electromagnetic Clutches

Running-in is required to obtain the rated torque values of electromagnetic clutches. Running-in is carried out by engaging and disengaging clutch at high speed several times with the pump in exaust position.

During assembly, make sure that there are no oil or grease traces on pulley surfaces, these must be completely clean.

When assembling electric clutches with front driving flange, check for proper coupling allignement.

Do not exceed the rated torque because this would cause slippage of contact surface with consequent over-heating.

This stage must not last more than 5 seconds since coils could burn.

## General Information

### Electromagnetic Clutches

### Product Overview

| Electromagnetic clutches series | Voltage | Rated torque daNm | Pump flanges | Pulley |
|---|---|---|---|---|
| ° 30900-1 | 12 V DC | 3 | Gr. 1 | diam. 125 mm. 1 Belt Section A (old type) |
| ° 30900-2 | 24 V DC | | | |
| 30900-1/N | 12 V DC | 3 | Gr. 1 | diam. 125 mm. 1 Belt Section A (new type) |
| 30900-2/N | 24 V DC | | | |
| 30900-1/N1 | 12 V DC | 3 | Gr. 1 | diam. 125 mm. Belt 4 PLV |
| 30900-2/N1 | 24 V DC | | | |
| 30933 | 12 V DC | 10 | Gr. 1 - Gr. 2 - Gr. 3<br>Gr. 2 Bosch - Gr. 3 Bosch<br>SAE A - SAE B | Front type |
| 30934 | 24 V DC | | | |
| 30901 | 12 V DC | 10 | Gr. 1 - Gr. 2 - Gr. 3<br>Gr. 2 Bosch - Gr. 3 Bosch<br>SAE A - SAE B | diam. 153 mm. 2 Belt Section A |
| 30903 | 24 V DC | | | |
| 30901-1/7 | 12 V DC | 10 | Gr. 1 - Gr. 2 - Gr. 3<br>Gr. 2 Bosch - Gr. 3 Bosch<br>SAE A - SAE B | diam. 152 mm. Belt 7 PLV |
| 30903-1/7 | 24 V DC | | | |
| 30929 | 12 V DC | 14 | Gr. 1 - Gr. 2 - Gr. 3<br>Gr. 2 Bosch - Gr. 3 Bosch<br>SAE A - SAE B | diam. 153 mm. 2 Belt Section A |
| 30930 | 24 V DC | | | |
| 30980 | 12 V DC | 14 | Gr. 1 - Gr. 2 - Gr. 3<br>Gr. 2 Bosch - Gr. 3 Bosch<br>SAE A - SAE B | diam. 178 mm. 2 Belt Section A |
| 30981 | 24 V DC | | | |
| 30929-1/7 | 12 V DC | 14 | Gr. 1 - Gr. 2 - Gr. 3<br>Gr. 2 Bosch - Gr. 3 Bosch<br>SAE A - SAE B | diam. 152 mm. Belt 7 PLV |
| 30930-1/7 | 24 V DC | | | |
| 30990 | 12 V DC | 21 | Gr. 1 - Gr. 2 - Gr. 3<br>Gr. 2 Bosch - Gr. 3 Bosch<br>SAE A - SAE B | diam. 186 mm. 2 Belt Section A |
| 30991 | 24 V DC | | | |
| 30940/SF | 12 V DC | 30 | Gr. 2 - Gr. 3 - Gr. 3,5 - Gr. 4<br>Gr. 3 Bosch<br>SAE A - SAE B - SAE C<br>L.G. 20-35-50-75 | diam. 229 mm. 2 Belt Section B |
| 30941/SF | 24 V DC | | | |

**Note:** ° On request

## Electromagnetic Clutches - Torque 3 daNm (old type)
## Pump Group 1
## Single "A" Section Pulley

## INSTALLATION DRAWING
- 30900-1: 12 Volt
- 30900-2: 24 Volt

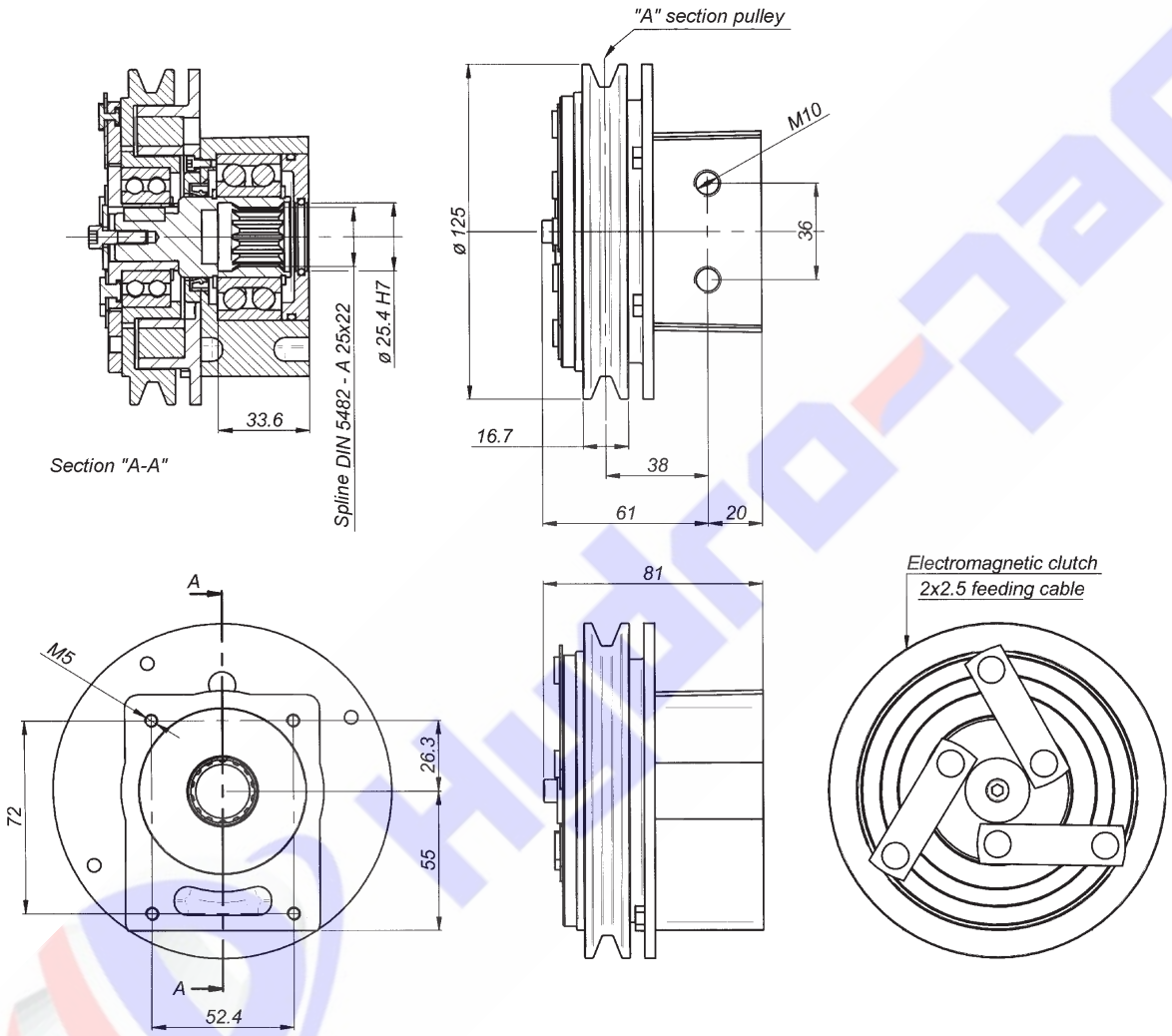


| | | | | |
|---|---|---|---|---|
| Nominal torque | 3,0 daNm | | Connection time | 25 ms |
| Static torque | 4,5 daNm | | Disconnection time | 40 ms |
| Dynamic torque | 3,2 daNm | at 500 n/min. | Minimum time between two connections | 20 sec |
| | 2,8 daNm | at 1000 n/min. | | |
| | 1,7 daNm | at 1500 n/min. | | |
| | 1,4 daNm | at 2000 n/min. | | |
| | 1,2 daNm | at 2500 n/min. | Max speed | 5000 n/min. |
| | 0,9 daNm | at 3000 n/min. | Weight | 3 Kg |

| Electric absorption | Resistance ( W ) | | Current ( A ) | | Power ( W ) | |
|---|---|---|---|---|---|---|
| Temperature | 20° C | 120° C | 20° C | 120° C | 20° C | 120° C |
| 12 V DC | 5,7 | 7,9 | 2,1 | 1,6 | 25,2 | 18 |
| 24 V DC | 21,7 | 30,7 | 1,1 | 0,8 | 26,5 | 19 |

All technical data are at 20°C / at 120° C the performance is 20% reduced.
All electromagnetic clutches are reversible.

## Electromagnetic Clutches - Torque 3 daNm (old type)
## Pump Group 1
## Single "A" Section Pulley

### ORDER CODE

° 30900 - 1 - [ ]

**Electromagnetic Clutch Series 30900 old type**
**Torque 3 daNm - Pump Gr. 1 - Single "A" pulley**

**° 30900 - 1 = 12 V DC**
**° 30900 - 2 = 24 V DC**

**Special versions**

### SPARE PARTS LIST

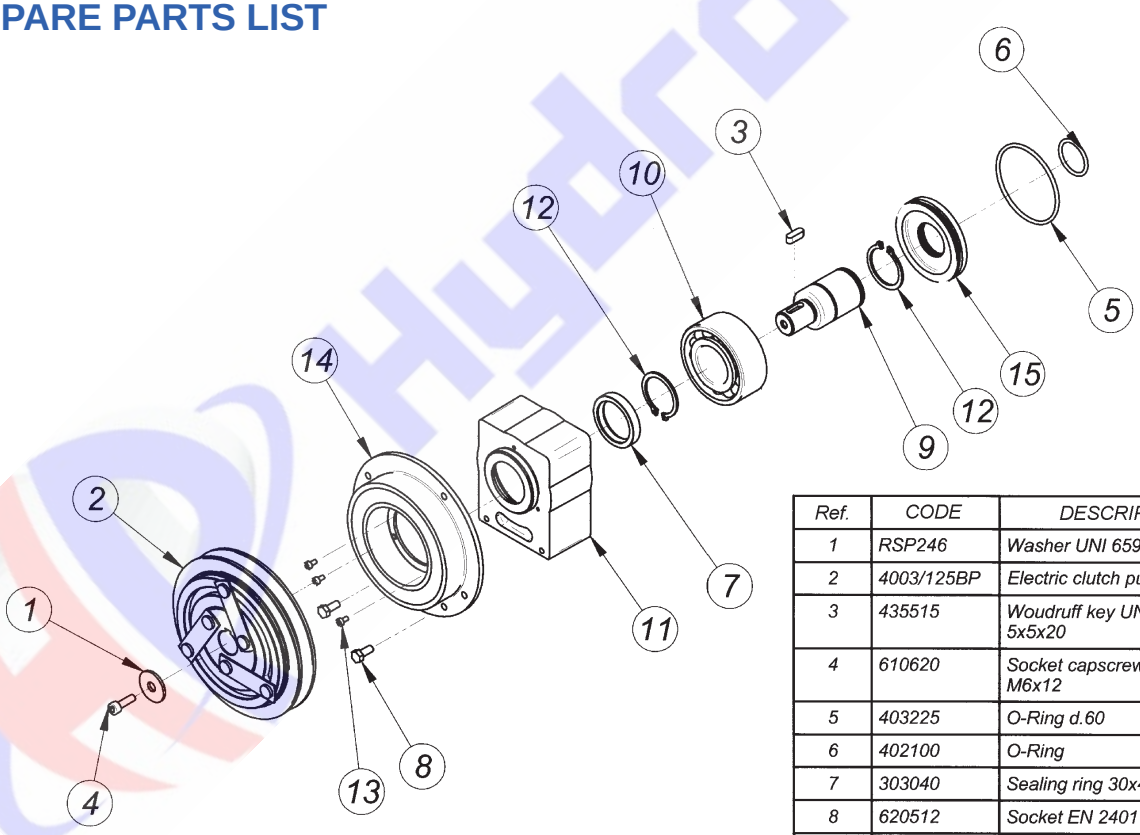


| Ref. | CODE | DESCRIPTION | Q.ty |
|---|---|---|---|
| 1 | RSP246 | Washer UNI 6593 - 6x24x2 | 1 |
| 2 | 4003/125BP | Electric clutch pulley | 1 |
| 3 | 435515 | Woudruff key UNI 6604 5x5x20 | 1 |
| 4 | 610620 | Socket capscrew UNI 5931 M6x12 | 1 |
| 5 | 403225 | O-Ring d.60 | 1 |
| 6 | 402100 | O-Ring | 1 |
| 7 | 303040 | Sealing ring 30x40x7 | 1 |
| 8 | 620512 | Socket EN 24017 M5x12 | 2 |
| 9 | AC30900 | Shaft | 1 |
| 10 | 503206 | Bearing SKF 3206 | 1 |
| 11 | 30009-3/V | Housing | 1 |
| 12 | 903000 | Snap ring UNI 7436 - 25 | 2 |
| 13 | 610306 | Socket capscrew M3x6 UNI 5931 | 3 |
| 14 | 401203/125B 402403/125B | Coil | 1 |
| 15 | COP-062 | Ring | 1 |

## Electromagnetic Clutches - Torque 3 daNm (new type)
## Pump Group 1
## Single "A" Section Pulley

## INSTALLATION DRAWING
## 30900-1/N: 12 Volt
## 30900-2/N: 24 Volt

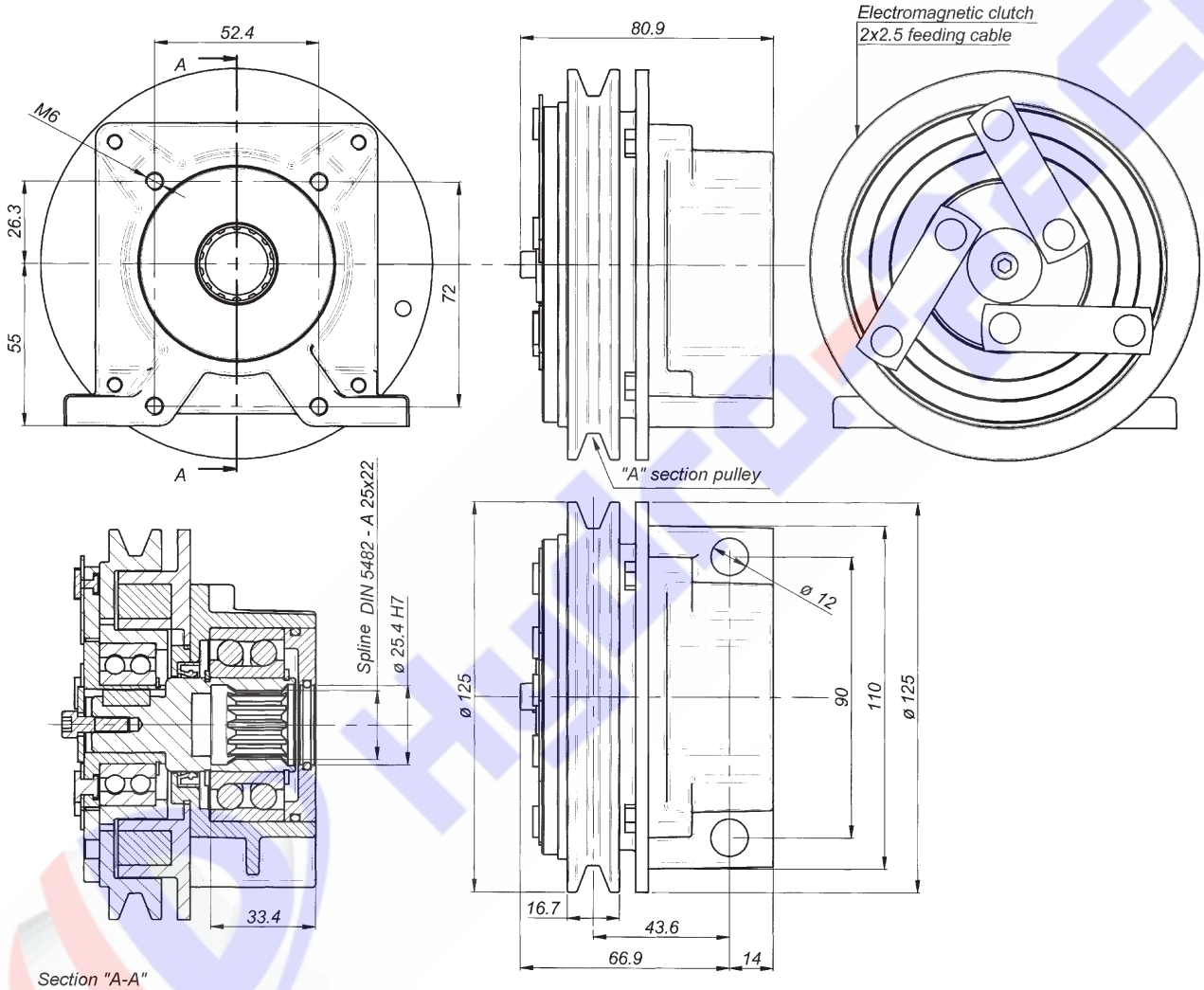


| | | | | |
|---|---|---|---|---|
| Nominal torque | 3,0 daNm | | Connection time | 25 ms |
| Static torque | 4,5 daNm | | Disconnection time | 40 ms |
| Dynamic torque | 3,2 daNm | at 500 n/min. | Minimum time between two connections | 20 sec |
| | 2,8 daNm | at 1000 n/min. | | |
| | 1,7 daNm | at 1500 n/min. | | |
| | 1,4 daNm | at 2000 n/min. | | |
| | 1,2 daNm | at 2500 n/min. | Max speed | 5000 n/min. |
| | 0,9 daNm | at 3000 n/min. | Weight | 3 Kg |

| Electric absorption | Resistance ( W ) | | Current ( A ) | | Power ( W ) | |
|---|---|---|---|---|---|---|
| | 20° C | 120° C | 20° C | 120° C | 20° C | 120° C |
| 12 V DC | 5,7 | 7,9 | 2,1 | 1,6 | 25,2 | 18 |
| 24 V DC | 21,7 | 30,7 | 1,1 | 0,8 | 26,5 | 19 |

All technical data are at 20°C / at 120° C the performance is 20% reduced.
All electromagnetic clutches are reversible.

## Electromagnetic Clutches Series - Torque 3 daNm (new type)
## Pump Group 1
## Single "A" Section Pulley

### ORDER CODE

30900 - 1/N - [ ]

**Electromagnetic Clutch Series 30900.../N (new type)**
**Torque 3 daNm - Pump Gr. 1 - Single "A" pulley**

**30900 - 1/N = 12 V DC**
**30900 - 2/N = 24 V DC**

**Special versions**

### SPARE PARTS LIST

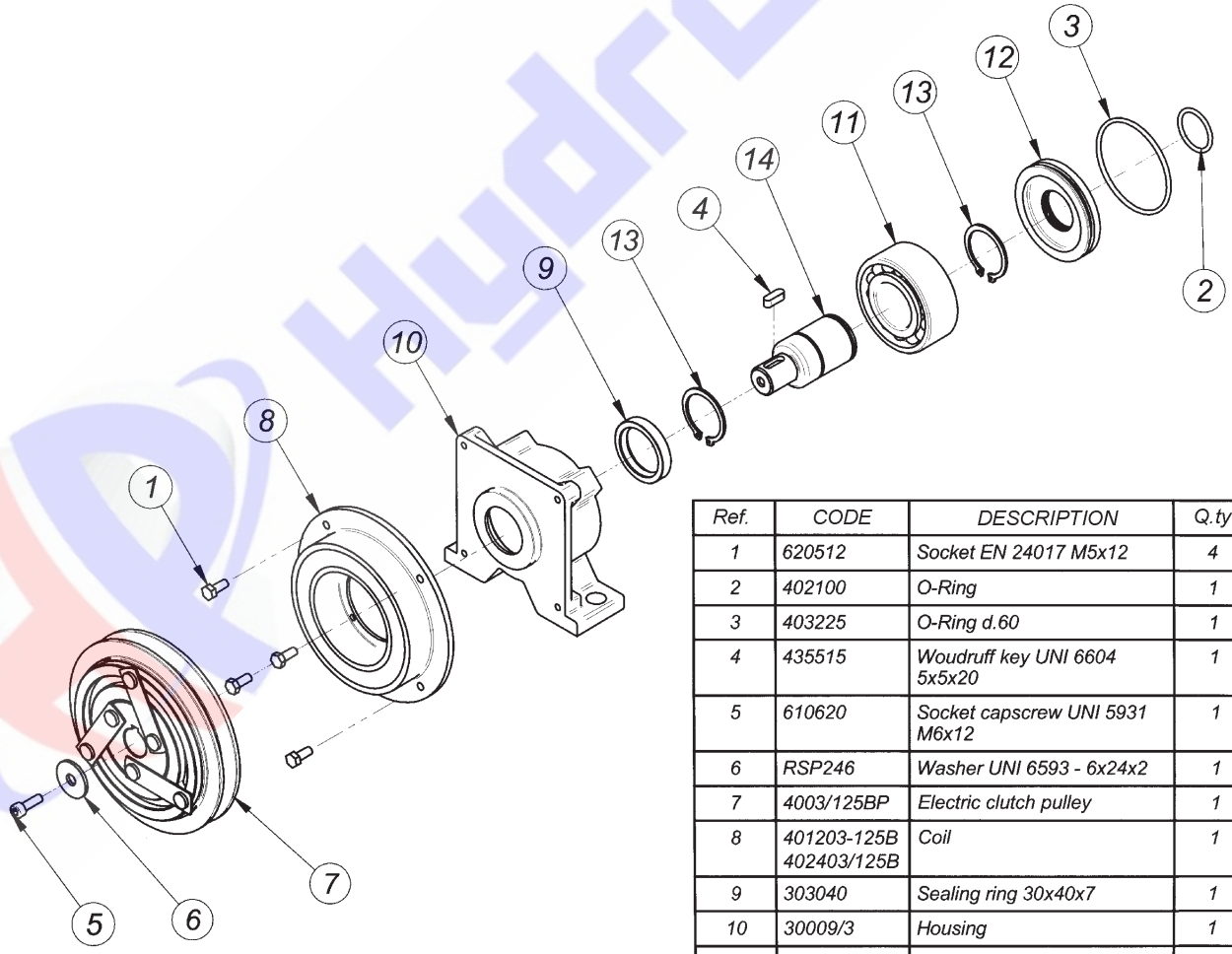


| Ref. | CODE | DESCRIPTION | Q.ty |
|---|---|---|---|
| 1 | 620512 | Socket EN 24017 M5x12 | 4 |
| 2 | 402100 | O-Ring | 1 |
| 3 | 403225 | O-Ring d.60 | 1 |
| 4 | 435515 | Woudruff key UNI 6604 5x5x20 | 1 |
| 5 | 610620 | Socket capscrew UNI 5931 M6x12 | 1 |
| 6 | RSP246 | Washer UNI 6593 - 6x24x2 | 1 |
| 7 | 4003/125BP | Electric clutch pulley | 1 |
| 8 | 401203-125B<br>402403/125B | Coil | 1 |
| 9 | 303040 | Sealing ring 30x40x7 | 1 |
| 10 | 30009/3 | Housing | 1 |
| 11 | 503206 | Bearing SKF 3206 | 1 |
| 12 | COP-062 | Ring | 1 |
| 13 | 903000 | Snap ring UNI 7436 - 25 | 2 |
| 14 | AC30900 | Shaft | 1 |

## Electromagnetic Clutches - Torque 3 daNm (new type)
## Pump Group 1
## 4PLV Section Pulley

## INSTALLATION DRAWING
## 30900-1/N1: 12 Volt
## 30900-2/N1: 24 Volt

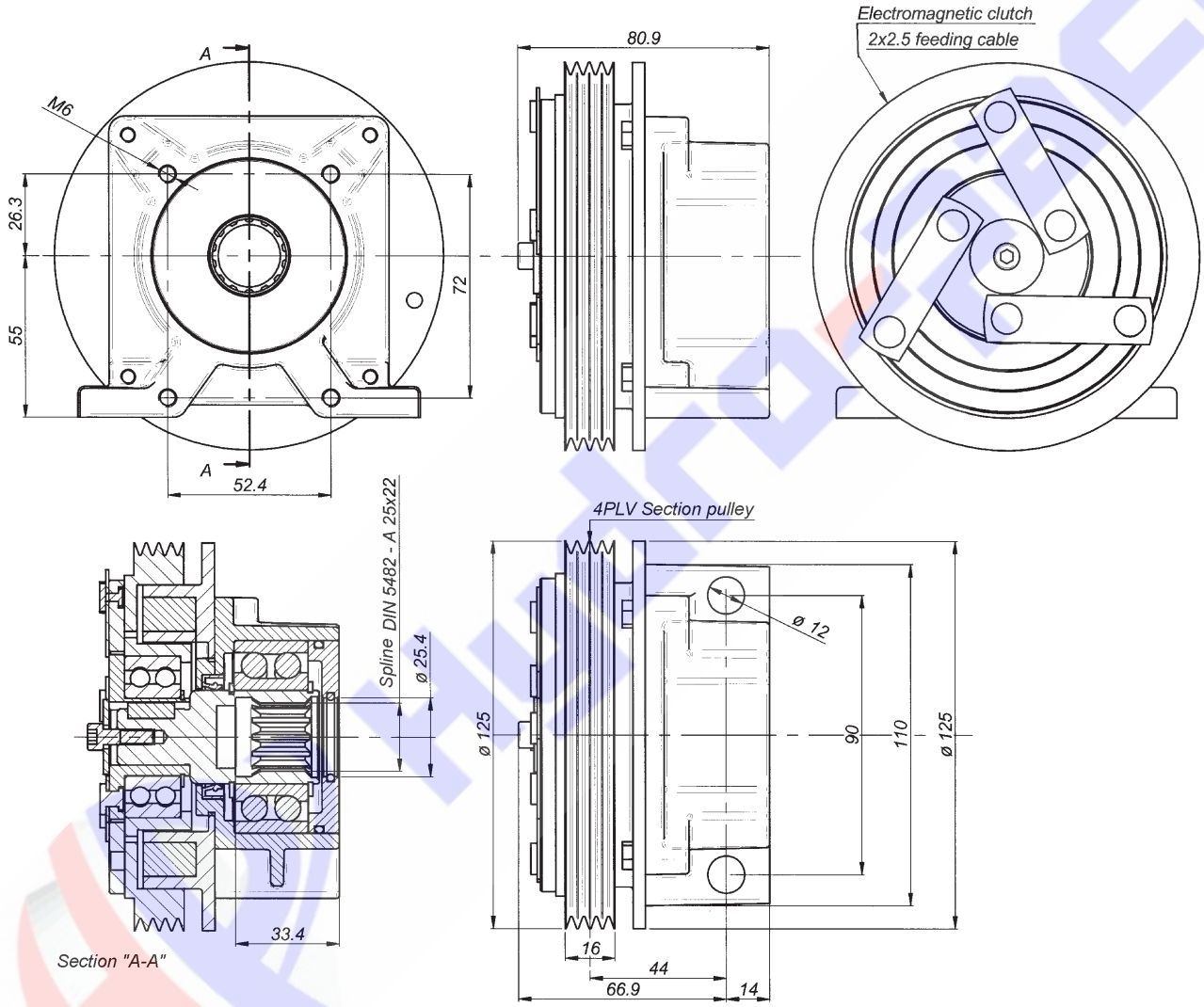


| | | | | |
|---|---|---|---|---|
| Nominal torque | 3,0 daNm | | Connection time | 25 ms |
| Static torque | 4,5 daNm | | Disconnection time | 40 ms |
| Dynamic torque | 3,2 daNm | at 500 n/min. | Minimum time between two connections | 20 sec |
| | 2,8 daNm | at 1000 n/min. | | |
| | 1,7 daNm | at 1500 n/min. | | |
| | 1,4 daNm | at 2000 n/min. | | |
| | 1,2 daNm | at 2500 n/min. | Max speed | 5000 n/min. |
| | 0,9 daNm | at 3000 n/min. | Weight | 3 Kg |

| Electric absorption | Resistance ( W ) | | Current ( A ) | | Power ( W ) | |
|---|---|---|---|---|---|---|
| | 20° C | 120° C | 20° C | 120° C | 20° C | 120° C |
| 12 V DC | 5,7 | 7,9 | 2,1 | 1,6 | 25,2 | 18 |
| 24 V DC | 21,7 | 30,7 | 1,1 | 0,8 | 26,5 | 19 |

All technical data are at 20°C / at 120° C the performance is 20% reduced.
All electromagnetic clutches are reversible.

## Electromagnetic Clutches - Torque 3 daNm (new type)
## Pump Group 1
## 4PLV Section Pulley

### ORDER CODE

30900 - 1/N1 - [ ]

**Electromagnetic Clutch Series 30900.../N1**
**Torque 3 daNm - Pump Gr. 1 - 4PLV pulley**

**30900 - 1/N1 = 12 V DC**
**30900 - 2/N1 = 24 V DC**

**Special versions**

### SPARE PARTS LIST

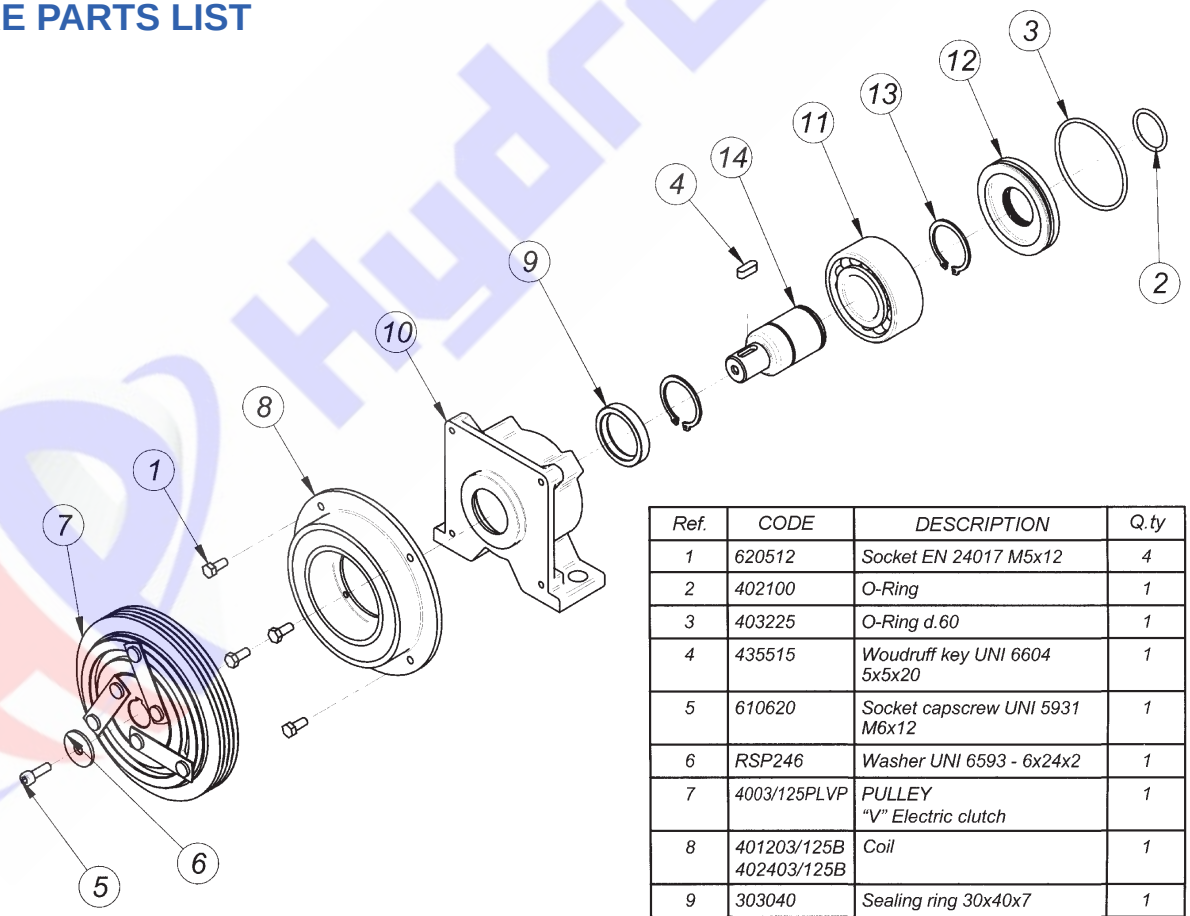


| Ref. | CODE | DESCRIPTION | Q.ty |
|---|---|---|---|
| 1 | 620512 | Socket EN 24017 M5x12 | 4 |
| 2 | 402100 | O-Ring | 1 |
| 3 | 403225 | O-Ring d.60 | 1 |
| 4 | 435515 | Woudruff key UNI 6604 5x5x20 | 1 |
| 5 | 610620 | Socket capscrew UNI 5931 M6x12 | 1 |
| 6 | RSP246 | Washer UNI 6593 - 6x24x2 | 1 |
| 7 | 4003/125PLVP | PULLEY "V" Electric clutch | 1 |
| 8 | 401203/125B 402403/125B | Coil | 1 |
| 9 | 303040 | Sealing ring 30x40x7 | 1 |
| 10 | 30009/3 | Housing | 1 |
| 11 | 503206 | Bearing SKF 3206 | 1 |
| 12 | COP-062 | Ring | 1 |
| 13 | 903000 | Snap ring UNI 7436 - 25 | 2 |
| 14 | AC30900 | Shaft | 1 |

## Front type Electromagnetic Clutches - Torque 10 daNm
## Pump Group: Gr. 1-2-3 - Gr. 2 Bosch - Gr. 3 Bosch - SAE A - SAE B
## Without Pulley

## INSTALLATION DRAWING
## 30933: 12 Volt
## 30934: 24 Volt

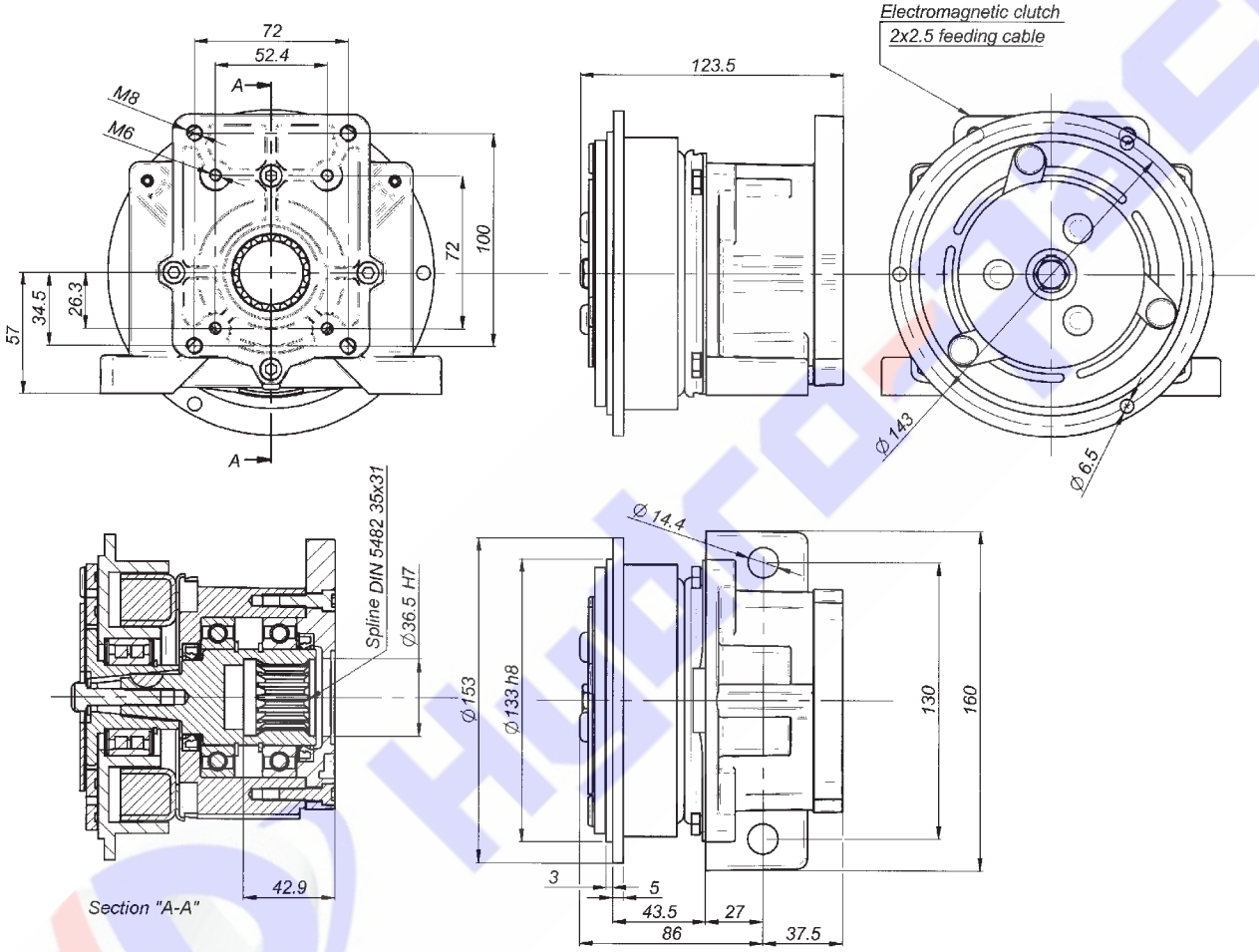


| | | | | |
|---|---|---|---|---|
| Nominal torque | 7,8 daNm | | Connection time | 25 ms |
| Static torque | 12,5 daNm | | Disconnection time | 40 ms |
| Dynamic torque | 8,5 daNm | at 500 n/min. | Minimum time between two connections | 20 sec |
| | 7,0 daNm | at 1000 n/min. | | |
| | 4,2 daNm | at 1500 n/min. | | |
| | 3,5 daNm | at 2000 n/min. | | |
| | 2,7 daNm | at 2500 n/min. | Max speed | 5000 n/min. |
| | 2,5 daNm | at 3000 n/min. | Weight | 5 Kg |

| Electric absorption | Resistance ( Ω ) | | Current ( A ) | | Power ( W ) | |
|---|---|---|---|---|---|---|
| | 20° C | 120° C | 20° C | 120° C | 20° C | 120° C |
| 12 V DC | 4,00 | 5,60 | 3,33 | 2,00 | 40,00 | 24,00 |
| 24 V DC | 20,00 | 28,00 | 1,26 | 0,77 | 30,30 | 18,18 |

All technical data are at 20°C / at 120 °C the performance is 20% reduced.
All electromagnetic clutches are reversible.

## Front type Electromagnetic Clutches - Torque 10 daNm
## Pump Group: Gr. 1-2-3 - Gr. 2 Bosch - Gr. 3 Bosch - SAE A - SAE B
## Without Pulley

### ORDER CODE

30935 - 30803 - [ ]

**Electromagnetic Clutch Front Type**
**Torque 10 daNm - Without pulley**

| Pump Flange | Voltage | Code | Flanges (see page 29) |
|---|---|---|---|
| Gr. 1 - 2 | 12 V DC | 30933 | - - Gr. 1 - 2 |
| Gr. 1 - 2 | 24 V DC | 30934 | |
| Gr. 2 Bosch | 12 V DC | 30933/2B | 30817 - Gr. 2 Bosch |
| Gr. 2 Bosch | 24 V DC | 30934/2B | |
| Gr. 3 | 12 V DC | 30935 | 30803 - Gr. 3 |
| Gr. 3 | 24 V DC | 30936 | |
| Gr. 3 Bosch | 12 V DC | 30933/3B | 30821 - Gr. 3 Bosch |
| Gr. 3 Bosch | 24 V DC | 30934/3B | |
| SAE A | 12 V DC | 30933/SA | 30420.3 - SAE A |
| SAE A | 24 V DC | 30934/SA | |
| SAE B | 12 V DC | 30933/SB | 30420.1 - SAE B |
| SAE B | 24 V DC | 30934/SB | |

Special versions

### SPARE PARTS LIST

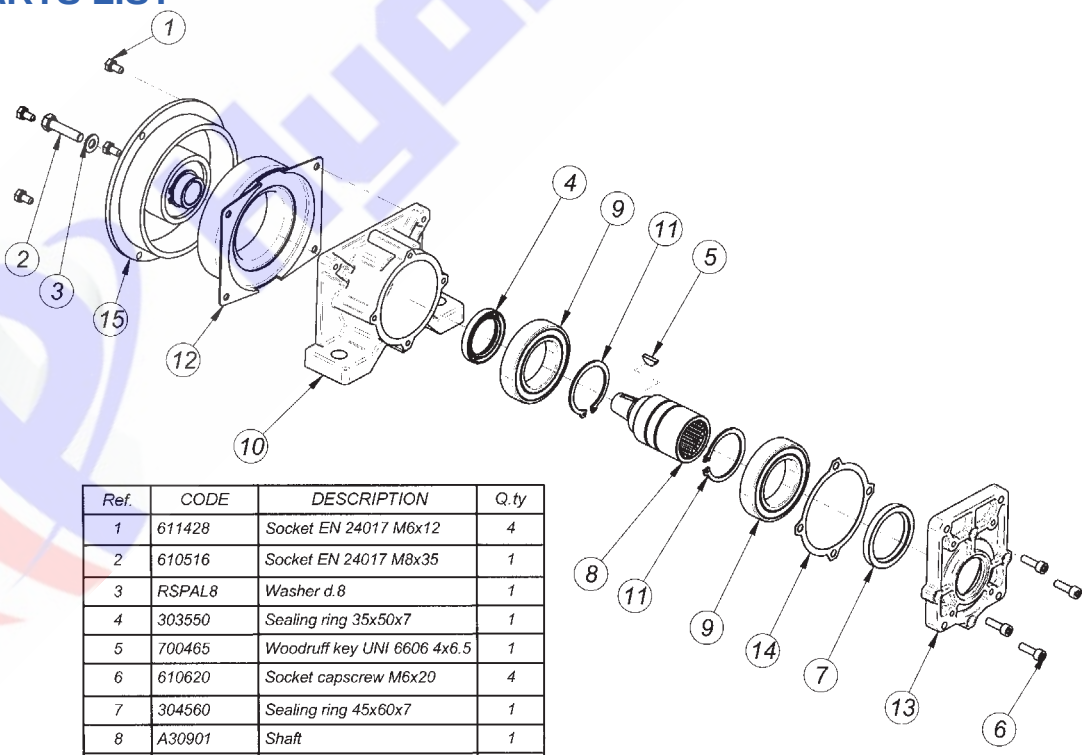


| Ref. | CODE | DESCRIPTION | Q.ty |
|---|---|---|---|
| 1 | 611428 | Socket EN 24017 M6x12 | 4 |
| 2 | 610516 | Socket EN 24017 M8x35 | 1 |
| 3 | RSPAL8 | Washer d.8 | 1 |
| 4 | 303550 | Sealing ring 35x50x7 | 1 |
| 5 | 700465 | Woodruff key UNI 6606 4x6.5 | 1 |
| 6 | 610620 | Socket capscrew M6x20 | 4 |
| 7 | 304560 | Sealing ring 45x60x7 | 1 |
| 8 | A30901 | Shaft | 1 |
| 9 | 506009/2Z | Bearing SKF 6009 2RS | 2 |
| 10 | 30009.1 | Housing | 1 |
| 11 | 904500 | Snap ring d.45 | 2 |
| 12 | 401210/FRB<br>402410/FRB | Coil | 1 |
| 13 | 30900.1 | Flange for pumps Gr 1 - 2 | 1 |
| 14 | 30009.1.1 | Gasket | 1 |
| 15 | 4010/FRBP | Electric clutch | 1 |

## Electromagnetic Clutches - Torque 10 daNm
## Pump Group: Gr. 1-2-3 - Gr. 2 Bosch - Gr. 3 Bosch - SAE A - SAE B
## Twin "A" Section Pulley

## INSTALLATION DRAWING
## 30901: 12 Volt
## 30903: 24 Volt

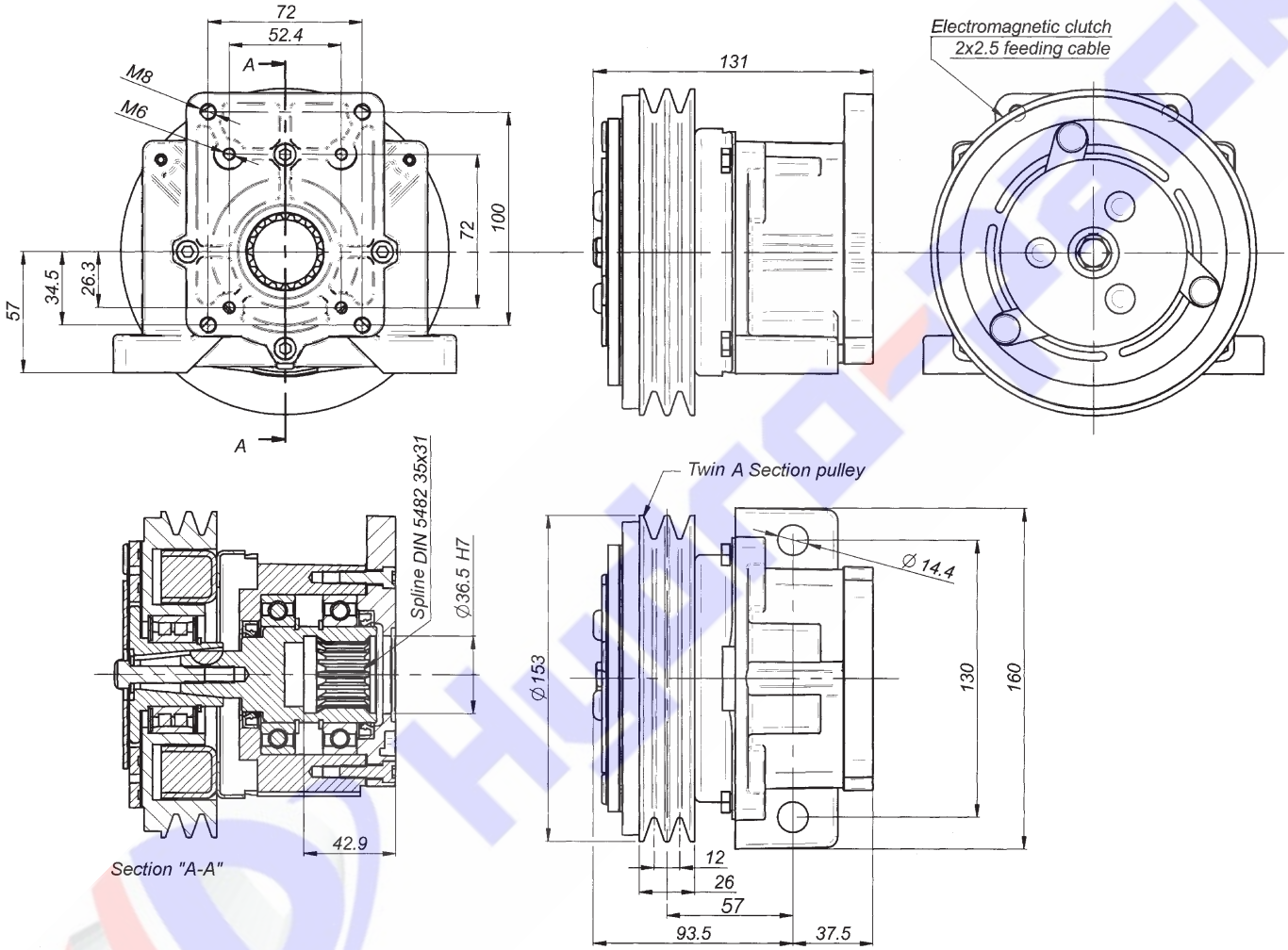


| | | | | |
|---|---|---|---|---|
| Nominal torque | 7,8 daNm | | Connection time | 25 ms |
| Static torque | 12,5 daNm | | Disconnection time | 40 ms |
| Dynamic torque | 8,5 daNm | at 500 n/min. | Minimum time between two connections | 20 sec. |
| | 7,0 daNm | at 1000 n/min. | | |
| | 4,2 daNm | at 1500 n/min. | | |
| | 3,5 daNm | at 2000 n/min. | | |
| | 2,7 daNm | at 2500 n/min. | Max speed | 5000 n/min. |
| | 2,5 daNm | at 3000 n/min. | Weight | 5,5 Kg |

| Electric absorption | Resistance ( Ω ) | | Current ( A ) | | Power ( W ) | |
|---|---|---|---|---|---|---|
| | 20° C | 120° C | 20° C | 120° C | 20° C | 120° C |
| 12 V DC | 4,00 | 5,60 | 3,33 | 2,00 | 40,00 | 24,00 |
| 24 V DC | 20,00 | 28,00 | 1,26 | 0,77 | 30,30 | 18,18 |

All technical data are at 20°C / at 120 °C the performance is 20% reduced.
All electromagnetic clutches are reversible.

## Electromagnetic Clutches - Torque 10 daNm
## Pump Group: Gr. 1-2-3 - Gr. 2 Bosch - Gr. 3 Bosch - SAE A - SAE B
## Twin "A" Section Pulley

### ORDER CODE

30909 - 30803 - [ ]

**Electromagnetic Clutch**
**Torque 10 daNm - Twin "A" pulley**

| Pump Flange | Voltage | Code | Flanges (see page 29) |
|---|---|---|---|
| Gr. 1 - 2 | 12 V DC | 30901 | - - Gr 1 - 2 |
| Gr. 1 - 2 | 24 V DC | 30903 | |
| Gr. 2 Bosch | 12 V DC | 30917 | 30817 - Gr. 2 Bosch |
| Gr. 2 Bosch | 24 V DC | 30919 | |
| Gr. 3 | 12 V DC | 30909 | 30803 - Gr 3 |
| Gr. 3 | 24 V DC | 30911 | |
| Gr. 3 Bosch | 12 V DC | 30925 | 30821 - Gr. 3 Bosch |
| Gr. 3 Bosch | 24 V DC | 30927 | |
| SAE A | 12 V DC | 30901/SA | 30420.3 - SAE A |
| SAE A | 24 V DC | 30903/SA | |
| SAE B | 12 V DC | 30901/SB | 30420.1 - SAE B |
| SAE B | 24 V DC | 30903/SB | |

Special versions

### SPARE PARTS LIST

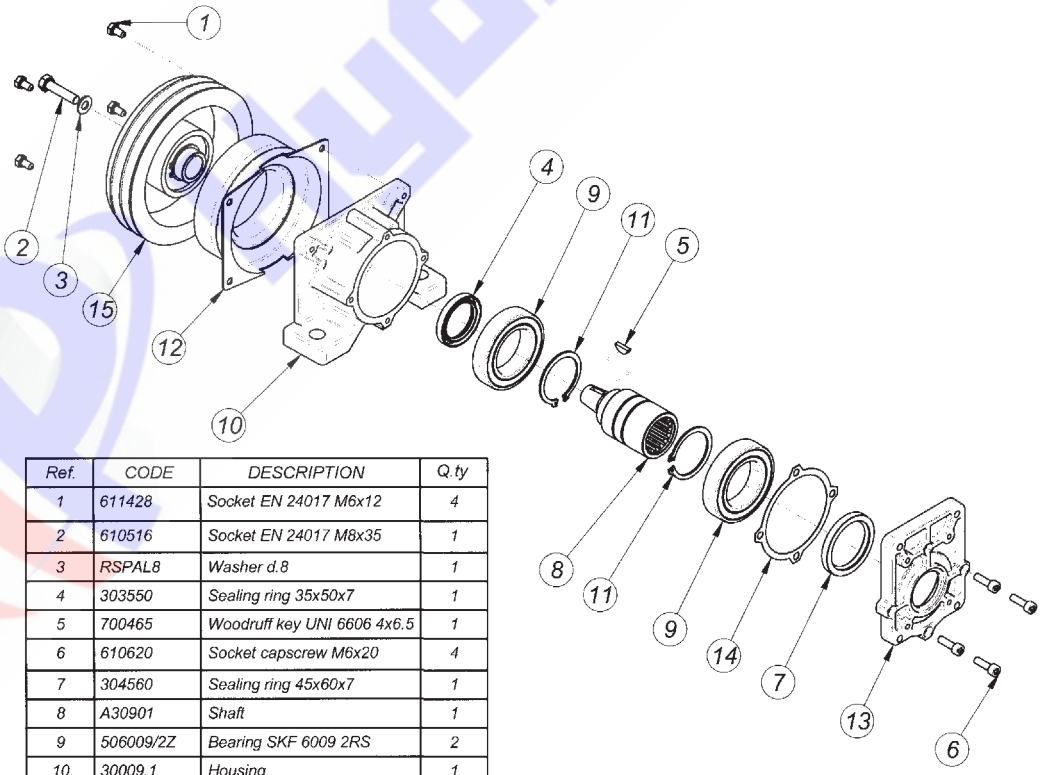


| Ref. | CODE | DESCRIPTION | Q.ty |
|---|---|---|---|
| 1 | 611428 | Socket EN 24017 M6x12 | 4 |
| 2 | 610516 | Socket EN 24017 M8x35 | 1 |
| 3 | RSPAL8 | Washer d.8 | 1 |
| 4 | 303550 | Sealing ring 35x50x7 | 1 |
| 5 | 700465 | Woodruff key UNI 6606 4x6.5 | 1 |
| 6 | 610620 | Socket capscrew M6x20 | 4 |
| 7 | 304560 | Sealing ring 45x60x7 | 1 |
| 8 | A30901 | Shaft | 1 |
| 9 | 506009/2Z | Bearing SKF 6009 2RS | 2 |
| 10 | 30009.1 | Housing | 1 |
| 11 | 904500 | Snap ring d.45 | 2 |
| 12 | 401210/153<br>402410/153 | Coil | 1 |
| 13 | 30900.1 | Flange for pumps Gr 1 - 2 | 1 |
| 14 | 30009.1.1 | Gasket | 1 |
| 15 | 4010/153P | Electric clutch | 1 |

## Electromagnetic Clutches - Torque 10 daNm
## Pump Group: Gr. 1-2-3 - Gr. 2 Bosch - Gr. 3 Bosch - SAE A - SAE B
## 7 PLV Section Pulley

## INSTALLATION DRAWING
## 30901-1/7: 12 Volt
## 30903-1/7: 24 Volt

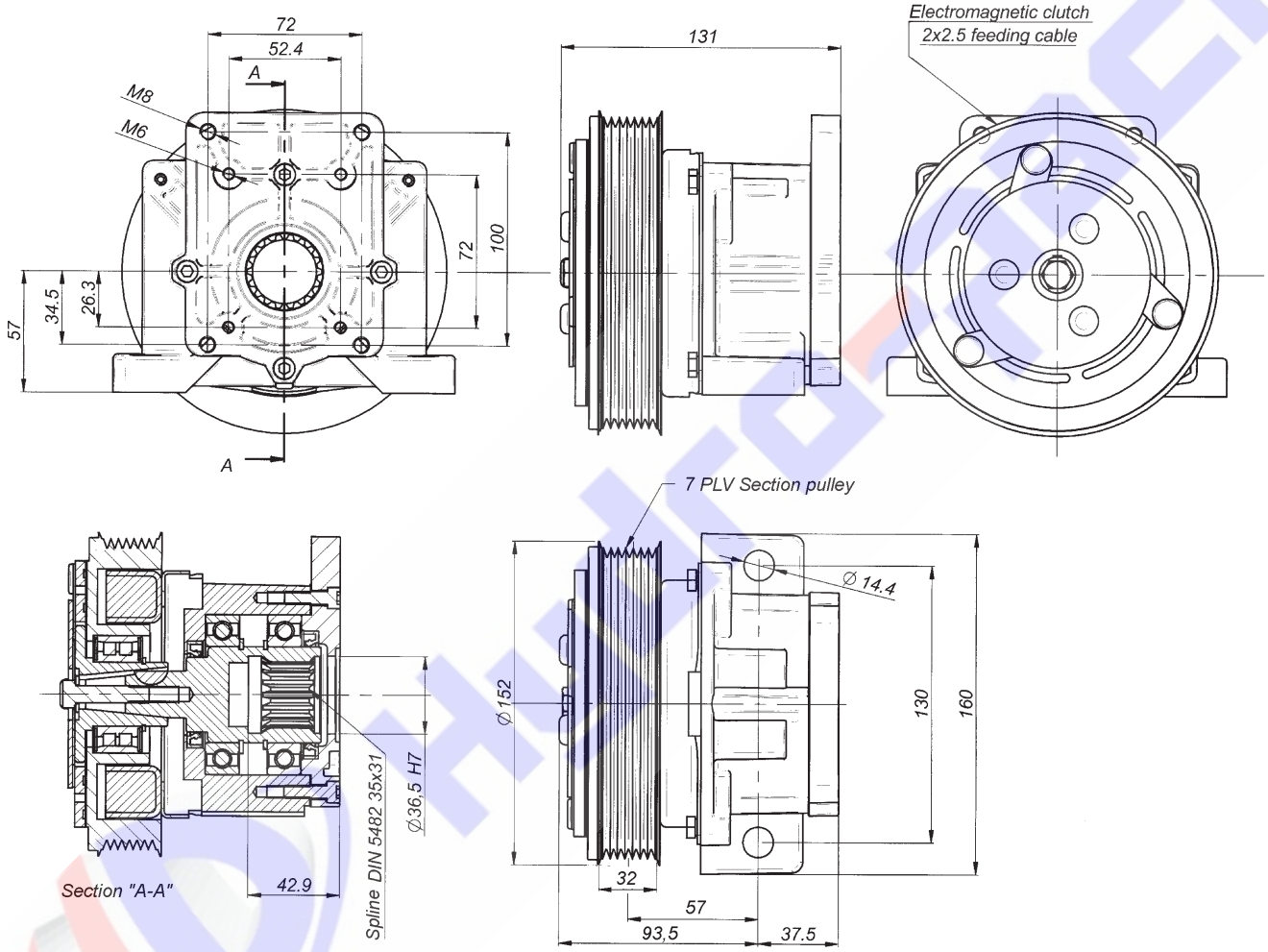


| | | | | |
|---|---|---|---|---|
| Nominal torque | 7,8 daNm | | Connection time | 25 ms |
| Static torque | 12,5 daNm | | Disconnection time | 40 ms |
| Dynamic torque | 8,5 daNm | at 500 n/min. | Minimum time between two connections | 20 sec |
| | 7,0 daNm | at 1000 n/min. | | |
| | 4,2 daNm | at 1500 n/min. | | |
| | 3,5 daNm | at 2000 n/min. | | |
| | 2,7 daNm | at 2500 n/min. | Max speed | 5000 n/min. |
| | 2,5 daNm | at 3000 n/min. | Weight | 5,5 Kg |

| Electric absorption | Resistance ( Ω ) | | Current ( A ) | | Power ( W ) | |
|---|---|---|---|---|---|---|
| | 20° C | 120° C | 20° C | 120° C | 20° C | 120° C |
| 12 V DC | 4,00 | 5,60 | 3,33 | 2,00 | 40,00 | 24,00 |
| 24 V DC | 20,00 | 28,00 | 1,26 | 0,77 | 30,30 | 18,18 |

All technical data are at 20°C / at 120 °C the performance is 20% reduced.
All electromagnetic clutches are reversible.

## Electromagnetic Clutches - Torque 10 daNm
## Pump Group: Gr. 1-2-3 - Gr. 2 Bosch - Gr. 3 Bosch - SAE A - SAE B
## 7 PLV Section Pulley

### ORDER CODE

30909-1/7 - 30803 - [ ]

**Electromagnetic Clutch**
**Torque 10 daNm - 7 PLV pulley**

| Pump Flange | Voltage | Code |
|---|---|---|
| Gr. 1 - 2 | 12 V DC | 30901-1/7 |
| Gr. 1 - 2 | 24 V DC | 30903-1/7 |
| Gr. 2 Bosch | 12 V DC | 30917-1/7 |
| Gr. 2 Bosch | 24 V DC | 30919-1/7 |
| Gr. 3 | 12 V DC | 30909-1/7 |
| Gr. 3 | 24 V DC | 30911-1/7 |
| Gr. 3 Bosch | 12 V DC | 30925-1/7 |
| Gr. 3 Bosch | 24 V DC | 30927-1/7 |
| SAE A | 12 V DC | 30901-1/SA |
| SAE A | 24 V DC | 30903-1/SA |
| SAE B | 12 V DC | 30901-1/7/SB |
| SAE B | 24 V DC | 30903-1/7/SB |

**Flanges**
**(see page 29)**

- - Gr. 1 - 2
30817 - Gr. 2 Bosch
30803 - Gr. 3
30821 - Gr. 3 Bosch
30420.3 - SAE A
30420.1 - SAE B

Special versions

### SPARE PARTS LIST

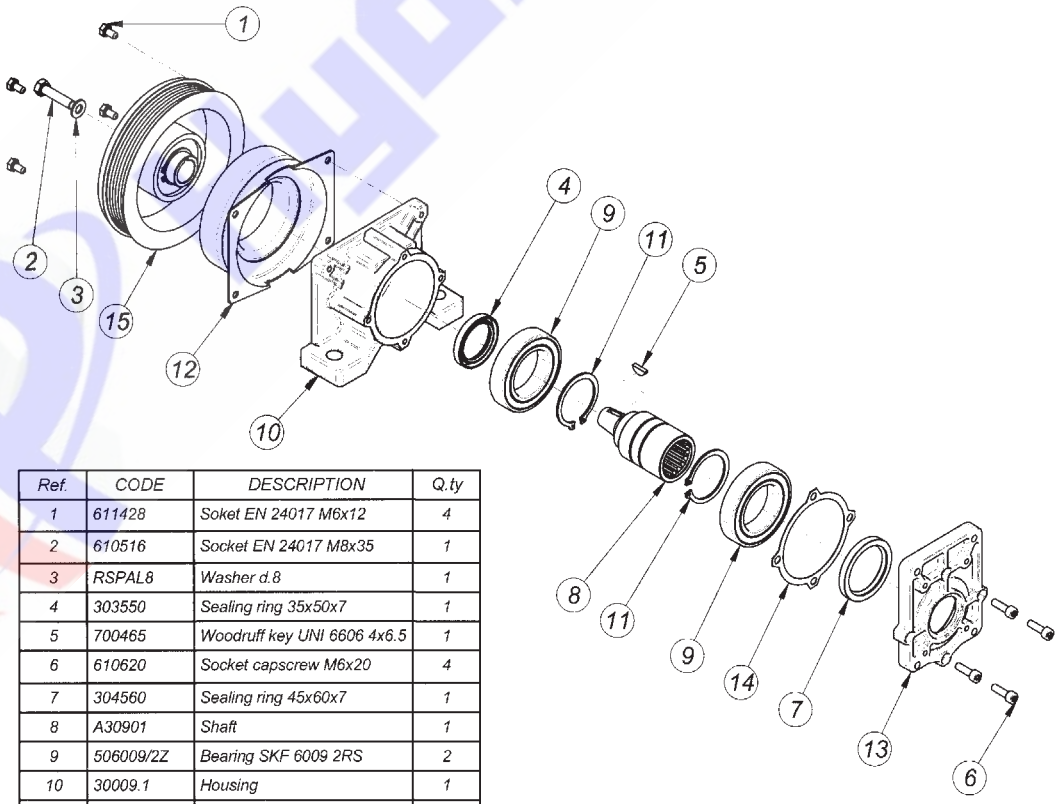


| Ref. | CODE | DESCRIPTION | Q.ty |
|---|---|---|---|
| 1 | 611428 | Soket EN 24017 M6x12 | 4 |
| 2 | 610516 | Socket EN 24017 M8x35 | 1 |
| 3 | RSPAL8 | Washer d.8 | 1 |
| 4 | 303550 | Sealing ring 35x50x7 | 1 |
| 5 | 700465 | Woodruff key UNI 6606 4x6.5 | 1 |
| 6 | 610620 | Socket capscrew M6x20 | 4 |
| 7 | 304560 | Sealing ring 45x60x7 | 1 |
| 8 | A30901 | Shaft | 1 |
| 9 | 506009/2Z | Bearing SKF 6009 2RS | 2 |
| 10 | 30009.1 | Housing | 1 |
| 11 | 904500 | Snap ring d.45 | 2 |
| 12 | 401210/PLV<br>402410/PLV | Coil | 1 |
| 13 | 30900.1 | Flange for pumps Gr 1 - 2 | 1 |
| 14 | 30009.1.1 | Gasket | 1 |
| 15 | 4010/PLV 7 | Electric clutch PLV | 1 |

## Electromagnetic Clutches - Torque 14 daNm
## Pump Group: Gr. 1-2-3 - Gr. 2 Bosch - Gr. 3 Bosch - SAE A - SAE B
## Twin "A" Section Pulley diam. 153

## INSTALLATION DRAWING
## 30929: 12 Volt
## 30930: 24 Volt

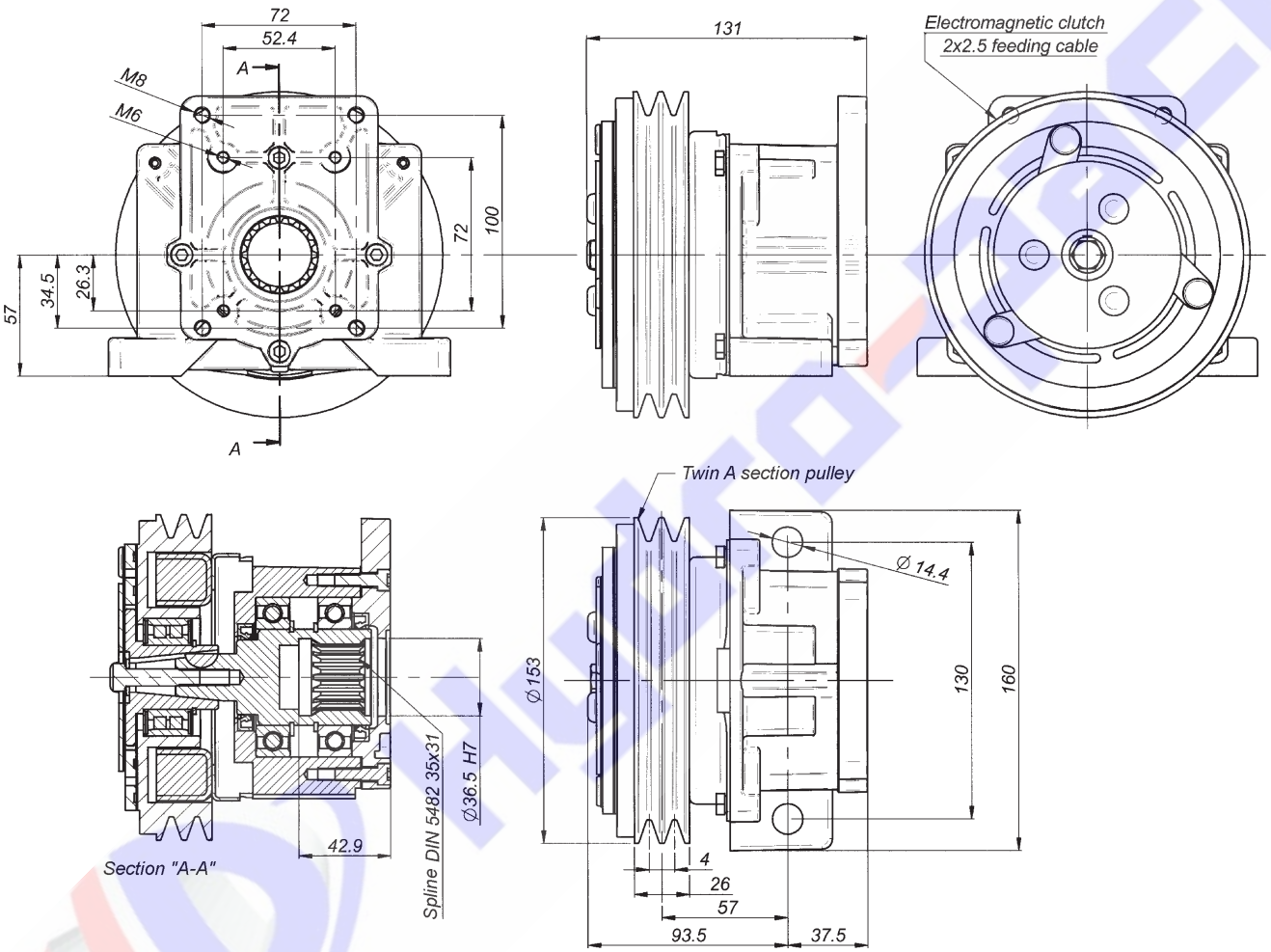


| | | | | |
|---|---|---|---|---|
| Nominal torque | 11,8 daNm | | Connection time | 25 ms |
| Static torque | 14,0 daNm | | Disconnection time | 40 ms |
| Dynamic torque | 12,5 daNm | at 500 n/min. | Minimum time between two connections | 20 sec |
| | 11,0 daNm | at 1000 n/min. | | |
| | 8,2 daNm | at 1500 n/min. | | |
| | 7,5 daNm | at 2000 n/min. | | |
| | 6,7 daNm | at 2500 n/min. | Max speed | 5000 n/min. |
| | 6,5 daNm | at 3000 n/min. | Weight | 5,5 Kg |

| Electric absorption | Resistance ( Ω ) | | Current ( A ) | | Power ( W ) | |
|---|---|---|---|---|---|---|
| | 20° C | 120° C | 20° C | 120° C | 20° C | 120° C |
| 12 V DC | 4,00 | 5,60 | 3,33 | 2,00 | 40,00 | 24,00 |
| 24 V DC | 20,00 | 28,00 | 1,26 | 0,77 | 30,30 | 18,18 |

All technical data are at 20°C / at 120 °C the performance is 20% reduced.
All electromagnetic clutches are reversible.

## Electromagnetic Clutches - Torque 14 daNm
## Pump Group: Gr. 1-2-3 - Gr. 2 Bosch - Gr. 3 Bosch - SAE A - SAE B
## Twin "A" Section Pulley diam. 153

### ORDER CODE

30931 - 30803 - [ ]

**Electromagnetic Clutch**
**Torque 14 daNm - Twin "A" Pulley diam. 153**

| Pump Flange | Voltage | Code |
|---|---|---|
| Gr. 1 - 2 | 12 V DC | 30929 |
| Gr. 1 - 2 | 24 V DC | 30930 |
| Gr. 2 Bosch | 12 V DC | 30929/2B |
| Gr. 2 Bosch | 24 V DC | 30930/2B |
| Gr. 3 | 12 V DC | 30931 |
| Gr. 3 | 24 V DC | 30932 |
| Gr. 3 Bosch | 12 V DC | 30931/3B |
| Gr. 3 Bosch | 24 V DC | 30932/3B |
| SAE A | 12 V DC | 30929/SA |
| SAE A | 24 V DC | 30930/SA |
| SAE B | 12 V DC | 30929/SB |
| SAE B | 24 V DC | 30930/SB |

**Flanges**
**(see page 29)**

- - Gr. 1 - 2
30817 - Gr. 2 Bosch
30803 - Gr. 3
30821 - Gr. 3 Bosch
30420.3 - SAE A
30420.1 - SAE B

Special versions

### SPARE PARTS LIST

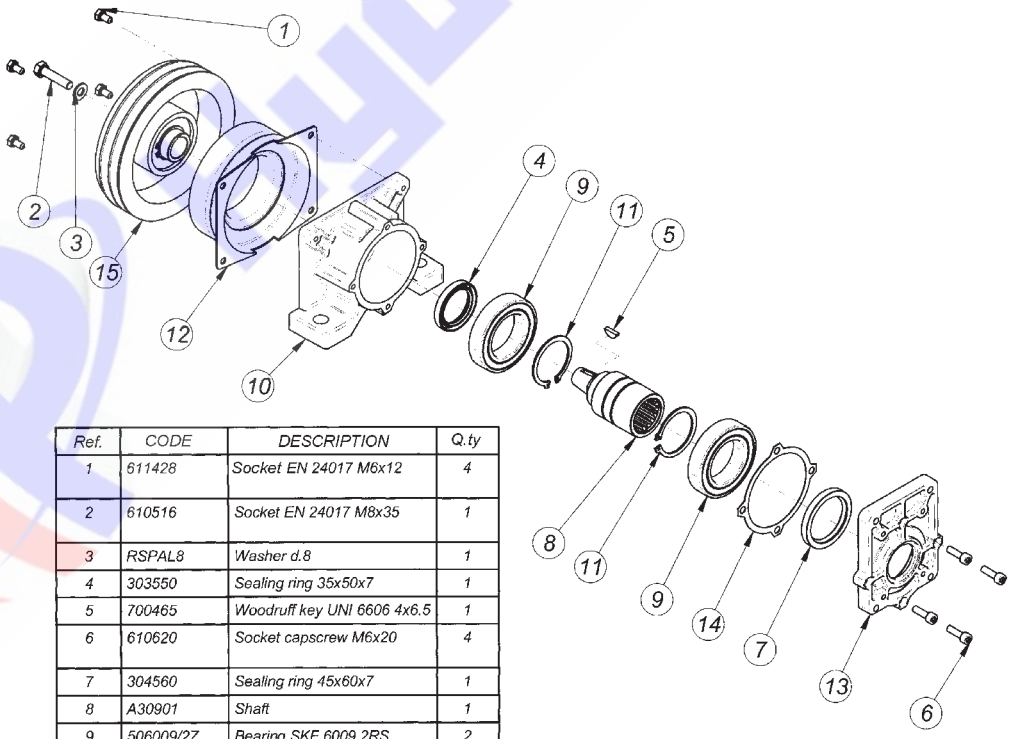


| Ref. | CODE | DESCRIPTION | Q.ty |
|---|---|---|---|
| 1 | 611428 | Socket EN 24017 M6x12 | 4 |
| 2 | 610516 | Socket EN 24017 M8x35 | 1 |
| 3 | RSPAL8 | Washer d.8 | 1 |
| 4 | 303550 | Sealing ring 35x50x7 | 1 |
| 5 | 700465 | Woodruff key UNI 6606 4x6.5 | 1 |
| 6 | 610620 | Socket capscrew M6x20 | 4 |
| 7 | 304560 | Sealing ring 45x60x7 | 1 |
| 8 | A30901 | Shaft | 1 |
| 9 | 506009/2Z | Bearing SKF 6009 2RS | 2 |
| 10 | 30009.1 | Housing | 1 |
| 11 | 904500 | Snap ring d.45 | 2 |
| 12 | 401214/153<br>402414/153 | Coil | 1 |
| 13 | 30900.1 | Flange for pumps Gr 1 - 2 | 1 |
| 14 | 30009.1.1 | Gasket | 1 |
| 15 | 4014/153P | Electric clutch | 1 |

## Electromagnetic Clutches - Torque 14 daNm
## Pump Group: Gr. 1-2-3 - Gr. 2 Bosch - Gr. 3 Bosch - SAE A - SAE B
## Twin "A" Section Pulley diam. 178

## INSTALLATION DRAWING
## 30980: 12 Volt
## 30981: 24 Volt

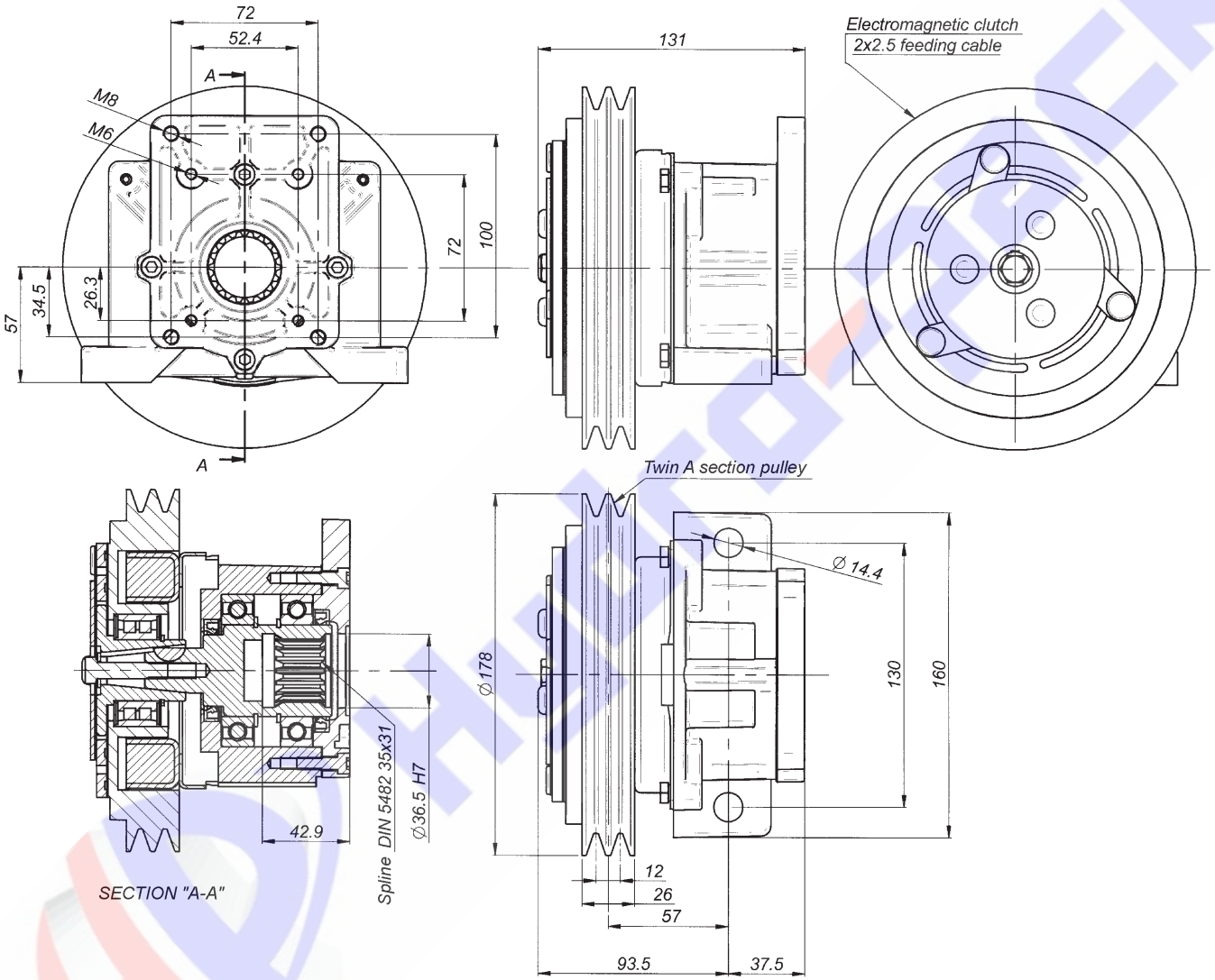


| | | | | |
|---|---|---|---|---|
| Nominal torque | 11,8 daNm | | Connection time | 25 ms |
| Static torque | 14,0 daNm | | Disconnection time | 40 ms |
| Dynamic torque | 12,5 daNm | at 500 n/min. | Minimum time between two connections | 20 sec |
| | 11,0 daNm | at 1000 n/min. | | |
| | 8,2 daNm | at 1500 n/min. | | |
| | 7,5 daNm | at 2000 n/min. | | |
| | 6,7 daNm | at 2500 n/min. | Max speed | 5000 n/min. |
| | 6,5 daNm | at 3000 n/min. | Weight | 5,8 Kg |

| Electric absorption | Resistance ( Ω ) | | Current ( A ) | | Power ( W ) | |
|---|---|---|---|---|---|---|
| | 20° C | 120° C | 20° C | 120° C | 20° C | 120° C |
| 12 V DC | 4,00 | 5,60 | 3,33 | 2,00 | 40,00 | 24,00 |
| 24 V DC | 20,00 | 28,00 | 1,26 | 0,77 | 30,30 | 18,18 |

All technical data are at 20°C / at 120 °C the performance is 20% reduced.
All electromagnetic clutches are reversible.

## Electromagnetic Clutches - Torque 14 daNm
## Pump Group: Gr. 1-2-3 - Gr. 2 Bosch - Gr. 3 Bosch - SAE A - SAE B
## Twin "A" Section Pulley diam. 178

### ORDER CODE

30982 - 30803 - [ ]

**Electromagnetic Clutch**
**Torque 14 daNm - Twin "A" Pulley diam. 178**

| Pump Flange | Voltage | Code | Flanges (see page 29) |
|---|---|---|---|
| Gr. 1 - 2 | 12 V DC | 30980 | - - Gr. 1 - 2 |
| Gr. 1 - 2 | 24 V DC | 30981 | |
| Gr. 2 Bosch | 12 V DC | 30980/2B | 30817 - Gr. 2 Bosch |
| Gr. 2 Bosch | 24 V DC | 30981/2B | |
| Gr. 3 | 12 V DC | 30982 | 30803 - Gr. 3 |
| Gr. 3 | 24 V DC | 30983 | |
| Gr. 3 Bosch | 12 V DC | 30982/3B | 30821 - Gr. 3 Bosch |
| Gr. 3 Bosch | 24 V DC | 30983/3B | |
| SAE A | 12 V DC | 30980/SA | 30420.3 - SAE A |
| SAE A | 24 V DC | 30981/SA | |
| SAE B | 12 V DC | 30980/SB | 30420.1 - SAE B |
| SAE B | 24 V DC | 30981/SB | |

Special versions

### SPARE PARTS LIST

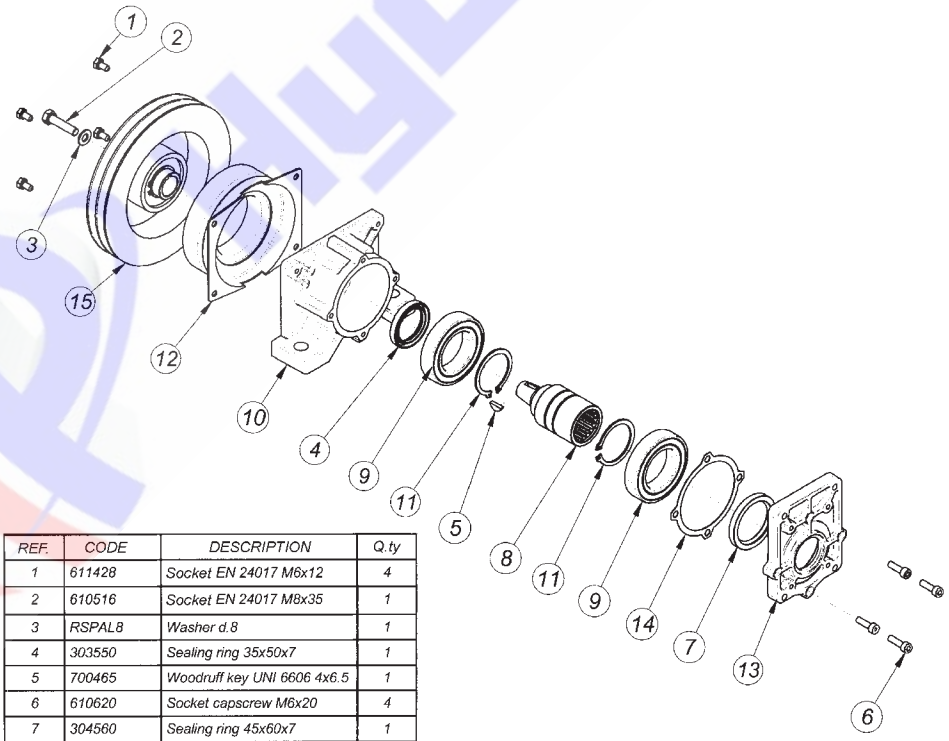


| REF. | CODE | DESCRIPTION | Q.ty |
|---|---|---|---|
| 1 | 611428 | Socket EN 24017 M6x12 | 4 |
| 2 | 610516 | Socket EN 24017 M8x35 | 1 |
| 3 | RSPAL8 | Washer d.8 | 1 |
| 4 | 303550 | Sealing ring 35x50x7 | 1 |
| 5 | 700465 | Woodruff key UNI 6606 4x6.5 | 1 |
| 6 | 610620 | Socket capscrew M6x20 | 4 |
| 7 | 304560 | Sealing ring 45x60x7 | 1 |
| 8 | A30901 | Shaft | 1 |
| 9 | 506009/2Z | Bearing SKF 6009 2RS | 2 |
| 10 | 30009.1 | Housing | 1 |
| 11 | 904500 | Snap ring d.45 | 2 |
| 12 | 401214/175<br>402414/175 | Coil | 1 |
| 13 | 30900.1 | Flange for pumps Gr 1 - 2 | 1 |
| 14 | 30009.1.1 | Gasket | 1 |
| 15 | 4014/175P | Electric clutch | 1 |

## Electromagnetic Clutches - Torque 14 daNm
## Pump Group: Gr. 1-2-3 - Gr. 2 Bosch - Gr. 3 Bosch - SAE A - SAE B
## 7 PLV Section Pulley

## INSTALLATION DRAWING
## 30929-1/7: 12 Volt
## 30930-1/7: 24 Volt

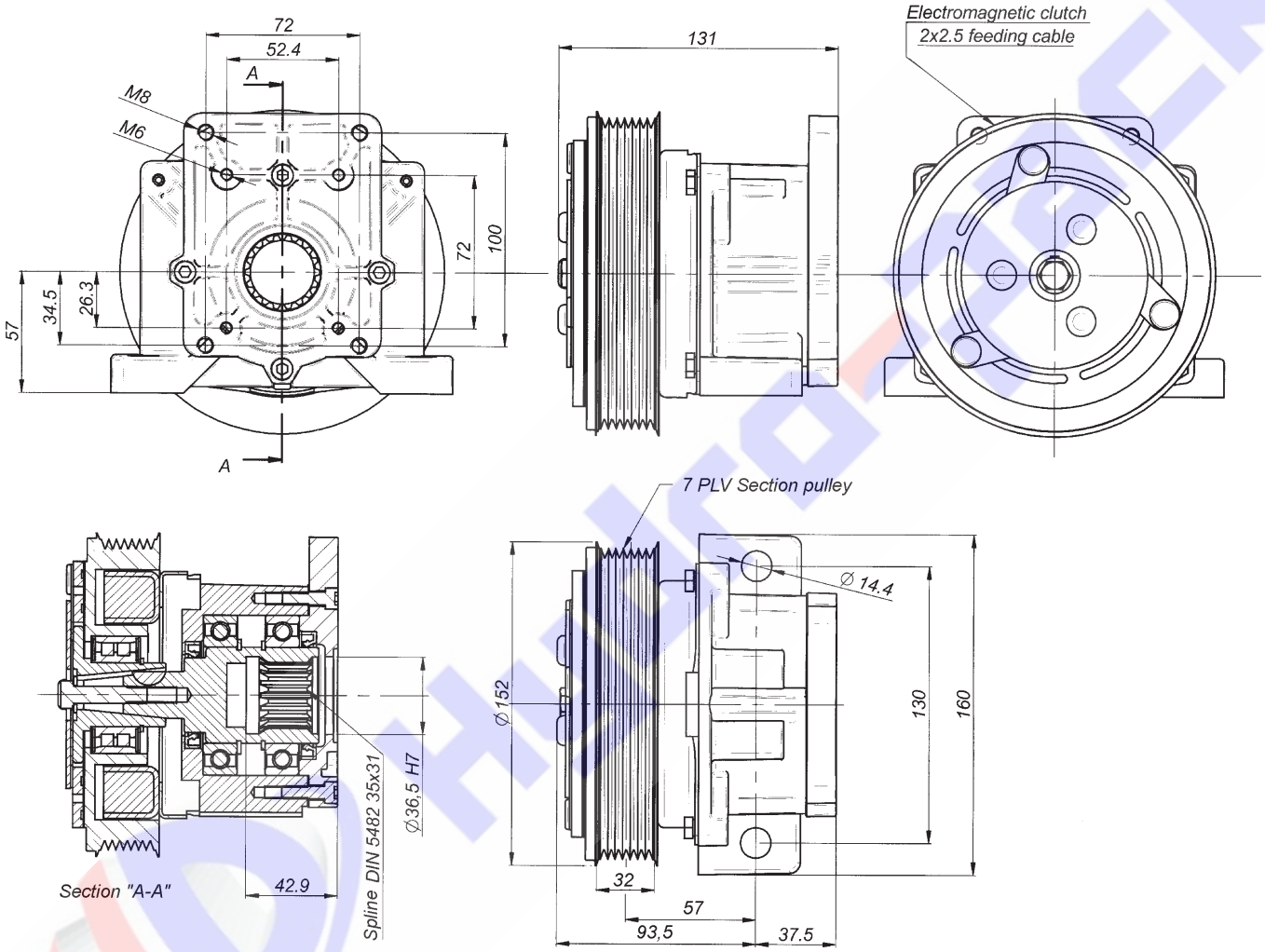


| | | | | |
|---|---|---|---|---|
| Nominal torque | 11,8 daNm | | Connection time | 25 ms |
| Static torque | 14,0 daNm | | Disconnection time | 40 ms |
| Dynamic torque | 12,5 daNm | at 500 n/min. | Minimum time between two connections | 20 sec |
| | 11,0 daNm | at 1000 n/min. | | |
| | 8,2 daNm | at 1500 n/min. | | |
| | 7,5 daNm | at 2000 n/min. | | |
| | 6,7 daNm | at 2500 n/min. | Max speed | 5000 n/min. |
| | 6,5 daNm | at 3000 n/min. | Weight | 5,5 Kg |

| Electric absorption | Resistance ( Ω ) | | Current ( A ) | | Power ( W ) | |
|---|---|---|---|---|---|---|
| | 20° C | 120° C | 20° C | 120° C | 20° C | 120° C |
| 12 V DC | 4,00 | 5,60 | 3,33 | 2,00 | 40,00 | 24,00 |
| 24 V DC | 20,00 | 28,00 | 1,26 | 0,77 | 30,30 | 18,18 |

All technical data are at 20°C / at 120 °C the performance is 20% reduced.
All electromagnetic clutches are reversible.

## Electromagnetic Clutches - Torque 14 daNm
## Pump Group: Gr. 1-2-3 - Gr. 2 Bosch - Gr. 3 Bosch - SAE A - SAE B
## 7 PLV Section Pulley

### ORDER CODE

30931-1/7 - 30803 - [ ]

**Electromagnetic Clutch**
**Torque 14 daNm - 7 PLV Pulley**

| Pump Flange | Voltage | Code |
|---|---|---|
| Gr. 1 - 2 | 12 V DC | 30929-1/7 |
| Gr. 1 - 2 | 24 V DC | 30930-1/7 |
| Gr. 2 Bosch | 12 V DC | 30929-1/7/2B |
| Gr. 2 Bosch | 24 V DC | 30930-1/7/2B |
| Gr. 3 | 12 V DC | 30931-1/7 |
| Gr. 3 | 24 V DC | 30932-1/7 |
| Gr. 3 Bosch | 12 V DC | 30931-1/7/3B |
| Gr. 3 Bosch | 24 V DC | 30932-1/7/3B |
| SAE A | 12 V DC | 30929-1/7/SA |
| SAE A | 24 V DC | 30930-1/7/SA |
| SAE B | 12 V DC | 30929-1/7/SB |
| SAE B | 24 V DC | 30930-1/7/SB |

**Flanges**
**(see page 29)**

- - Gr. 1 - 2
30817 - Gr. 2 Bosch
30803 - Gr. 3
30821 - Gr. 3 Bosch
30420.3 - SAE A
30420.1 - SAE B

Special versions

### SPARE PARTS LIST

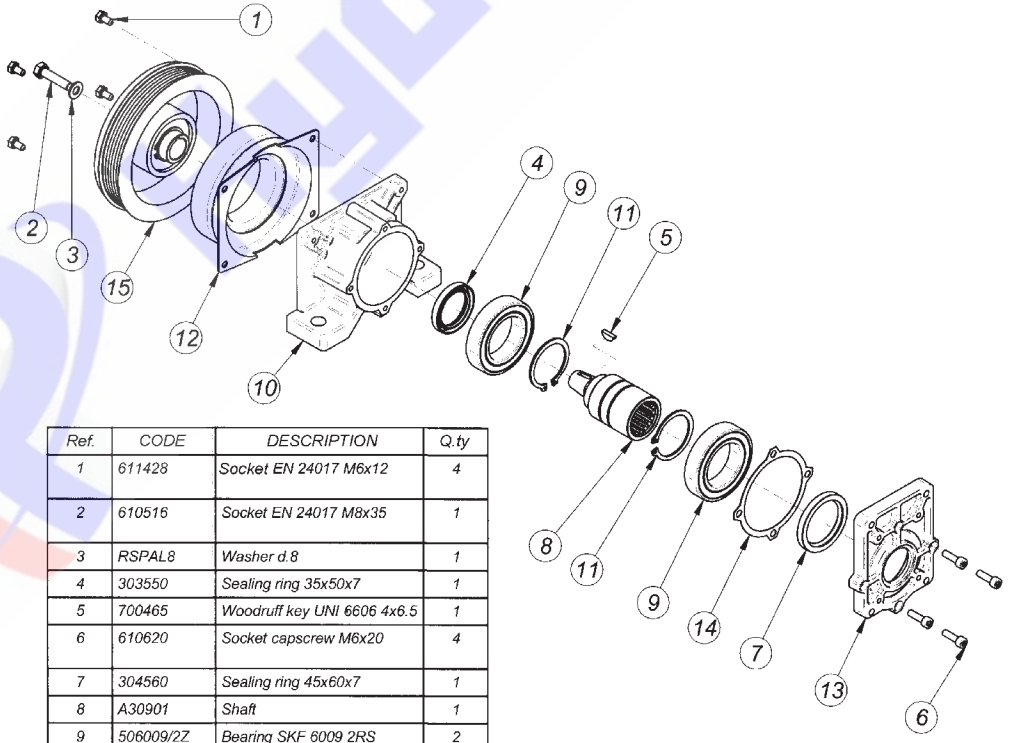


| Ref. | CODE | DESCRIPTION | Q.ty |
|---|---|---|---|
| 1 | 611428 | Socket EN 24017 M6x12 | 4 |
| 2 | 610516 | Socket EN 24017 M8x35 | 1 |
| 3 | RSPAL8 | Washer d.8 | 1 |
| 4 | 303550 | Sealing ring 35x50x7 | 1 |
| 5 | 700465 | Woodruff key UNI 6606 4x6.5 | 1 |
| 6 | 610620 | Socket capscrew M6x20 | 4 |
| 7 | 304560 | Sealing ring 45x60x7 | 1 |
| 8 | A30901 | Shaft | 1 |
| 9 | 506009/2Z | Bearing SKF 6009 2RS | 2 |
| 10 | 30009.1 | Housing | 1 |
| 11 | 904500 | Snap ring d.45 | 2 |
| 12 | 401214/PLV<br>402414/PLV | Coil | 1 |
| 13 | 30900.1 | Flange for pumps Gr 1 - 2 | 1 |
| 14 | 30009.1.1 | Gasket | 1 |
| 15 | 4014/PLVP 7 | Electric clutch PLV | 1 |

## Electromagnetic Clutches - Torque 21 daNm
## Pump Group: Gr. 1-2-3 - Gr. 2 Bosch - Gr. 3 Bosch - SAE A - SAE B
## Twin "A" Section Pulley diam. 186

## INSTALLATION DRAWING
## 30990: 12 Volt
## 30991: 24 Volt

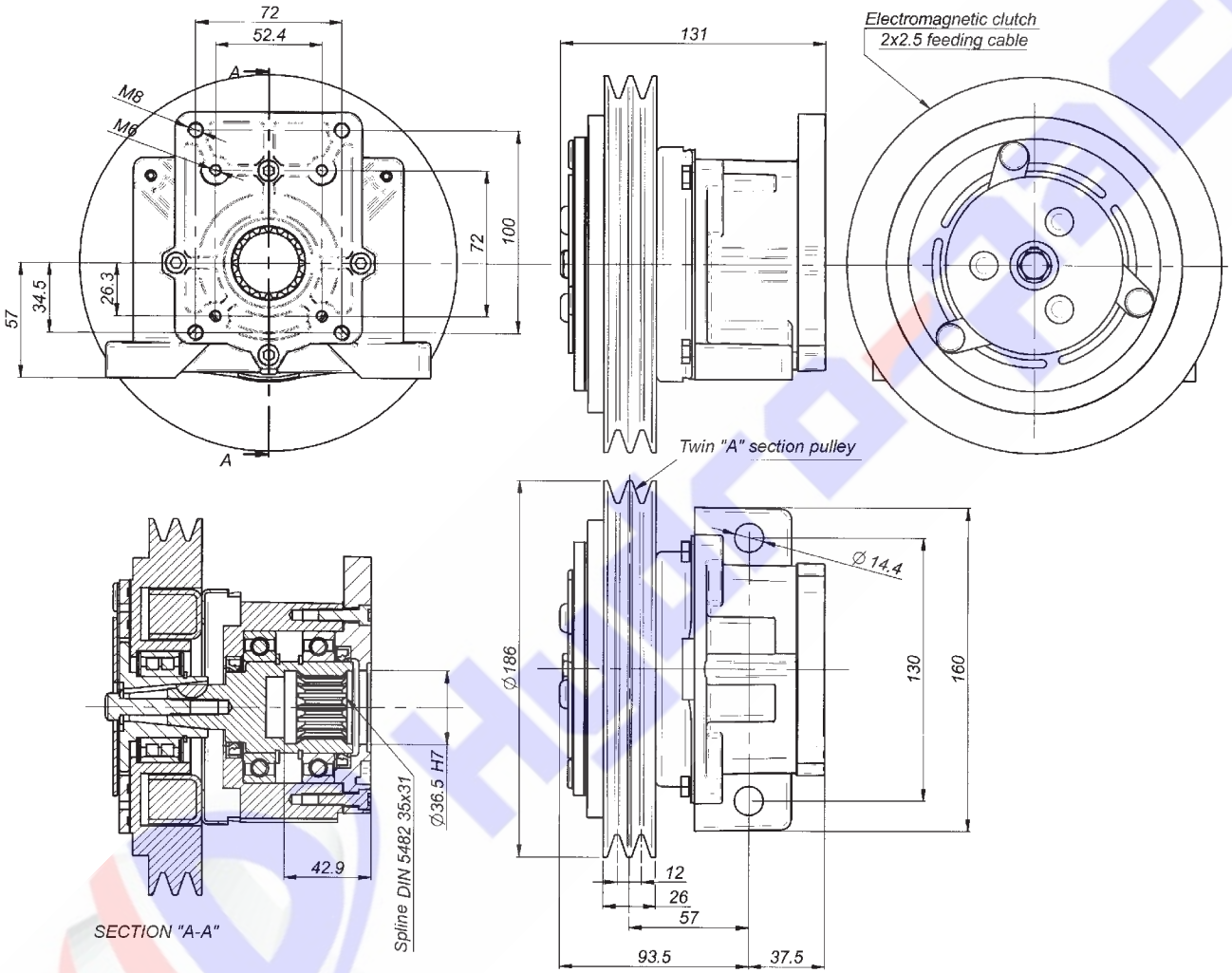


| | | | | |
|---|---|---|---|---|
| Nominal torque | 16,0 daNm | | Connection time | 25 ms |
| Static torque | 21,0 daNm | | Disconnection time | 40 ms |
| Dynamic torque | 14,5 daNm | at 500 n/min. | Minimum time between two connections | 20 sec |
| | 12,0 daNm | at 1000 n/min. | | |
| | 9,5 daNm | at 1500 n/min. | | |
| | 8,8 daNm | at 2000 n/min. | | |
| | 8,0 daNm | at 2500 n/min. | Max speed | 5000 n/min. |
| | 7,8 daNm | at 3000 n/min. | Weight | 8 Kg |

| Electric absorption | Resistance ( Ω ) | | Current ( A ) | | Power ( W ) | |
|---|---|---|---|---|---|---|
| | 20° C | 120° C | 20° C | 120° C | 20° C | 120° C |
| 12 V DC | 2,96 | 3,97 | 4,05 | 2,71 | 48,70 | 32,50 |
| 24 V DC | 12,30 | 16,60 | 1,95 | 1,31 | 47,00 | 30,70 |

All technical data are at 20°C / at 120 °C the performance is 20% reduced.
All electromagnetic clutches are reversible.

## Electromagnetic Clutches - Torque 21 daNm
## Pump Group: Gr. 1-2-3 - Gr. 2 Bosch - Gr. 3 Bosch - SAE A - SAE B
## Twin "A" Section Pulley diam. 186

### ORDER CODE

30992 - 30803 - [ ]

**Electromagnetic Clutch**
**Torque 21 daNm - Twin "A" Pulley diam. 186**

| Pump Flange | Voltage | Code |
|---|---|---|
| Gr. 1 - 2 | 12 V DC | 30990 |
| Gr. 1 - 2 | 24 V DC | 30991 |
| Gr. 2 Bosch | 12 V DC | 30990/2B |
| Gr. 2 Bosch | 24 V DC | 30991/2B |
| Gr. 3 | 12 V DC | 30992 |
| Gr. 3 | 24 V DC | 30993 |
| Gr. 3 Bosch | 12 V DC | 30992/3B |
| Gr. 3 Bosch | 24 V DC | 30993/3B |
| SAE A | 12 V DC | 30990/SA |
| SAE A | 24 V DC | 30991/SA |
| SAE B | 12 V DC | 30990/SB |
| SAE B | 24 V DC | 30991/SB |

**Flanges**
**(see page 29)**

- - Gr. 1 - 2
30817 - Gr. 2 Bosch
30803 - Gr. 3
30821 - Gr. 3 Bosch
30420.3 - SAE A
30420.1 - SAE B

Special versions

### SPARE PARTS LIST

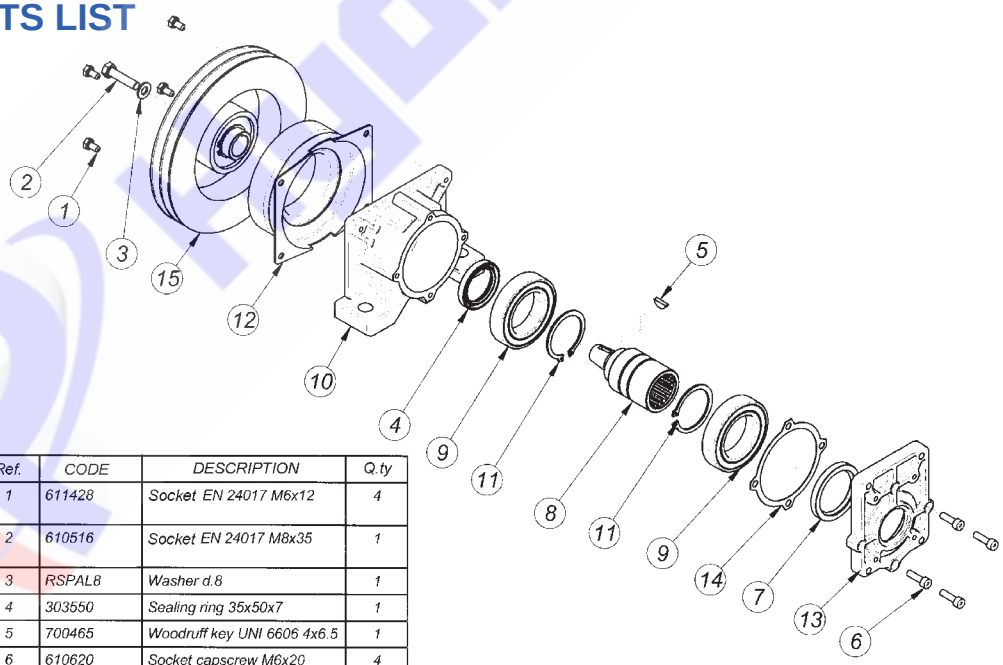


| Ref. | CODE | DESCRIPTION | Q.ty |
|---|---|---|---|
| 1 | 611428 | Socket EN 24017 M6x12 | 4 |
| 2 | 610516 | Socket EN 24017 M8x35 | 1 |
| 3 | RSPAL8 | Washer d.8 | 1 |
| 4 | 303550 | Sealing ring 35x50x7 | 1 |
| 5 | 700465 | Woodruff key UNI 6606 4x6.5 | 1 |
| 6 | 610620 | Socket capscrew M6x20 | 4 |
| 7 | 304560 | Sealing ring 45x60x7 | 1 |
| 8 | A30901 | Shaft | 1 |
| 9 | 506009/2Z | Bearing SKF 6009 2RS | 2 |
| 10 | 30009.1 | Housing | 1 |
| 11 | 904500 | Snap ring d.45 | 2 |
| 12 | 401221/186B<br>402421/186B | Coil | 1 |
| 13 | 30900.1 | Flange for pumps Gr 1 - 2 | 1 |
| 14 | 30009.1.1 | Gasket | 1 |
| 15 | 4021/186BP | Electric clutch PLV | 1 |

## Electromagnetic Clutches - Torque 30 daNm
## Pump Group: Gr. 2-3-4 - Gr. 3 Bosch - SAE A - SAE B - LG 20-35-50-75
## Twin "B" Section Pulley diam. 229

## INSTALLATION DRAWING
## 30940/SF: 12 Volt
## 30941/SF: 24 Volt

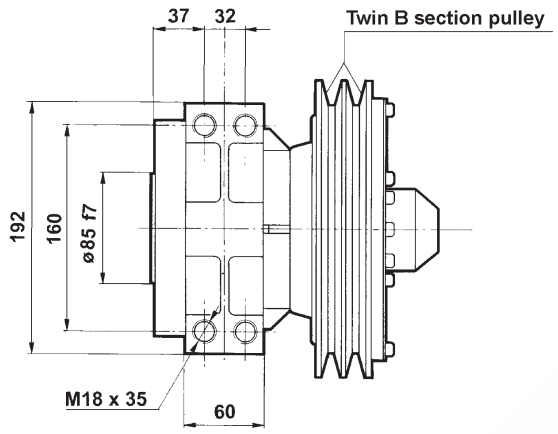


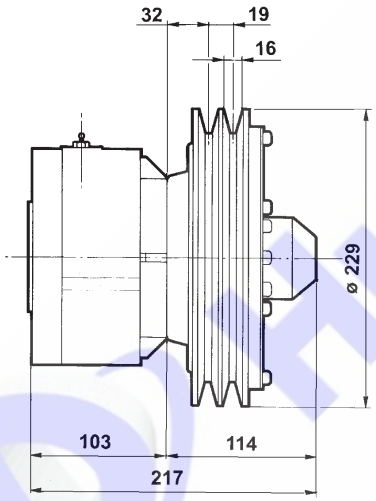


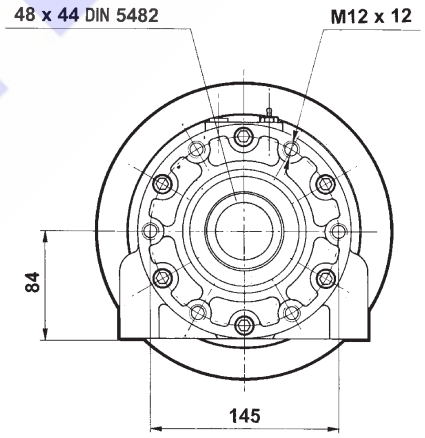


| | | | | |
|---|---|---|---|---|
| Nominal torque | 38,0 daNm | | Connection time | 25 ms |
| Static torque | 50,0 daNm | | Disconnection time | 40 ms |
| Dynamic torque | 33,0 daNm | at 500 n/min. | Minimum time between two connections | 20 sec |
| | 31,5 daNm | at 1000 n/min. | | |
| | 28,7 daNm | at 1500 n/min. | | |
| | 28,0 daNm | at 2000 n/min. | | |
| | 27,2 daNm | at 2500 n/min. | Max speed | 5000 n/min. |
| | 27,0 daNm | at 3000 n/min. | Weight | 20 Kg |

| Electric absorption | Resistance ( Ω ) | | Current ( A ) | | Power ( W ) | |
|---|---|---|---|---|---|---|
| | 20° C | 120° C | 20° C | 120° C | 20° C | 120° C |
| 12 V DC | 1,81 | 2,60 | 6,60 | 4,62 | 80,00 | 56,00 |
| 24 V DC | 7,40 | 10,50 | 3,25 | 2,30 | 78,00 | 54,60 |

All technical data are at 20°C / at 120 °C the performance is 20% reduced.
All electromagnetic clutches are reversible.

## Electromagnetic Clutches - Torque 30 daNm
## Pump Group: Gr. 2-3-4 - Gr. 3 Bosch - SAE A - SAE B - LG 20-35-50-75
## Twin "B" Section Pulley diam. 229

### ORDER CODE

30940 - 30400 - [ ]

**Electromagnetic Clutch**
**Torque 30 daNm - Twin "B" Pulley diam. 229**

| Pump Flange | Voltage | Code |
|---|---|---|
| Without flange | 12 V DC | 30940/SF |
| Without flange | 24 V DC | 30941/SF |
| Gr. 2 | 12 V DC | 30940 |
| Gr. 2 | 24 V DC | 30941 |
| Gr. 3 | 12 V DC | 30942 |
| Gr. 3 | 24 V DC | 30943 |
| Gr. 3,5 | 12 V DC | 30944 |
| Gr. 3,5 | 24 V DC | 30945 |
| Gr. 4 | 12 V DC | 30946 |
| Gr. 4 | 24 V DC | 30947 |
| Gr. 3 Bosch | 12 V DC | 30948 |
| Gr. 3 Bosch | 24 V DC | 30949 |
| SAE A | 12 V DC | 30950 |
| SAE A | 24 V DC | 30951 |
| SAE B | 12 V DC | 30952 |
| SAE B | 24 V DC | 30953 |
| SAE C | 12 V DC | 30954 |
| SAE C | 24 V DC | 30955 |
| LG 20-35 | 12 V DC | 30958 |
| LG 20-35 | 24 V DC | 30959 |
| LG 50 | 12 V DC | 30960 |
| LG 50 | 24 V DC | 30961 |
| LG 75 | 12 V DC | 30962 |
| LG 75 | 24 V DC | 30963 |

**Flanges**
**(see page 30)**

-

30400 - Gr. 2

30401 - Gr. 3

30402 - Gr. 3,5

30403 - Gr. 4

30417 - Gr. 3 Bosch

30420 - SAE A

30422 - SAE B

30432 - SAE C

30461 - LG 20-35

30462 - LG 50

30463 - LG 75

Special versions

## Electromagnetic Clutches - Torque 30 daNm
## Pump Group: Gr. 2-3-4 - Gr. 3 Bosch - SAE A - SAE B - LG 20-35-50-75
## Twin "B" Section Pulley diam. 229

### SPARE PARTS LIST

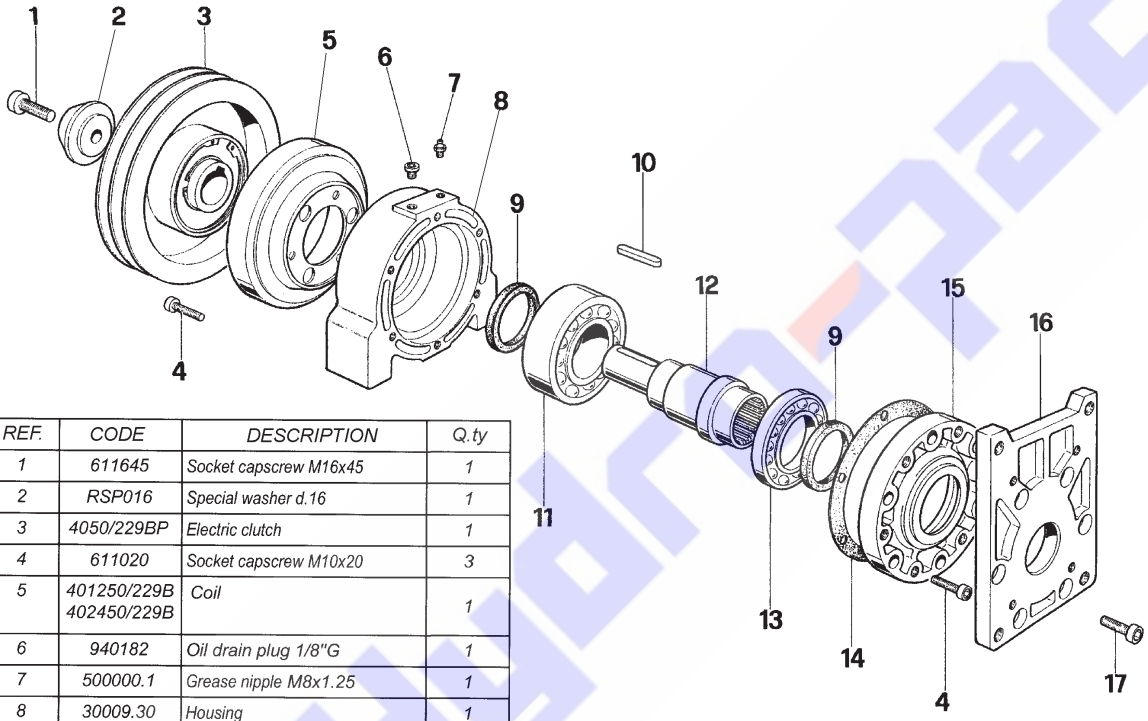


| REF. | CODE | DESCRIPTION | Q.ty |
|---|---|---|---|
| 1 | 611645 | Socket capscrew M16x45 | 1 |
| 2 | RSP016 | Special washer d.16 | 1 |
| 3 | 4050/229BP | Electric clutch | 1 |
| 4 | 611020 | Socket capscrew M10x20 | 3 |
| 5 | 401250/229B<br>402450/229B | Coil | 1 |
| 6 | 940182 | Oil drain plug 1/8"G | 1 |
| 7 | 500000.1 | Grease nipple M8x1.25 | 1 |
| 8 | 30009.30 | Housing | 1 |
| 9 | 306075 | Sealing ring 60x75x8 | 2 |
| 10 | 421086 | Key 10x8x60 UNI 6604 | 1 |
| 11 | 503212/Z | Bearing 3212 A | 1 |
| 12 | Ac30940 | Shaft | 1 |
| 13 | 501601/Z | Bearing 16012 A | 1 |
| 14 | 30470.2 | Gasket | 1 |
| 15 | 30470 | Round flange | 1 |
| 16 | 30900.1 | Flange | 1 |
| 17 | 611025 | Socket capscrew M10x25 | 6 |

## Flanges for Electromagnetic Clutches 10, 14, 21 daNm

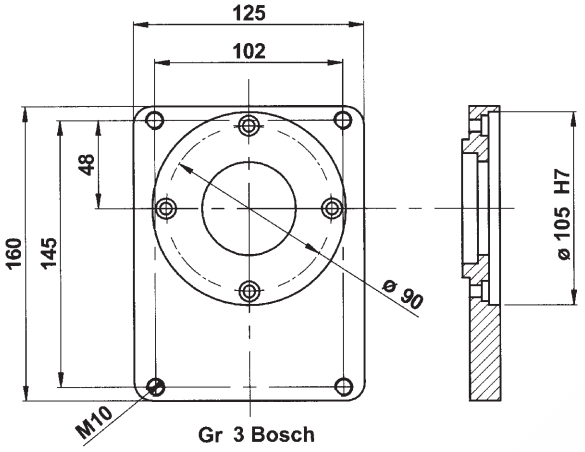


Gr 3 Bosch
30821

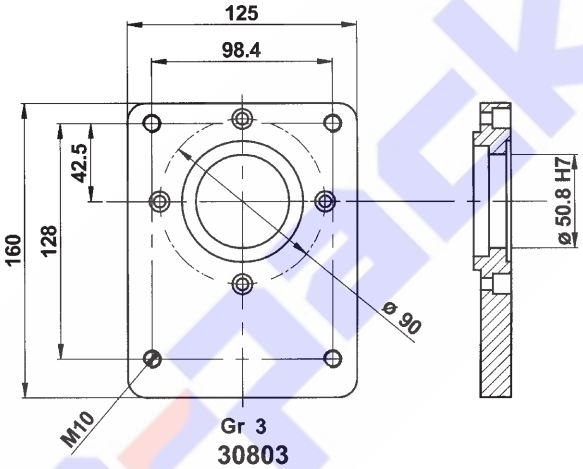


Gr 3
30803

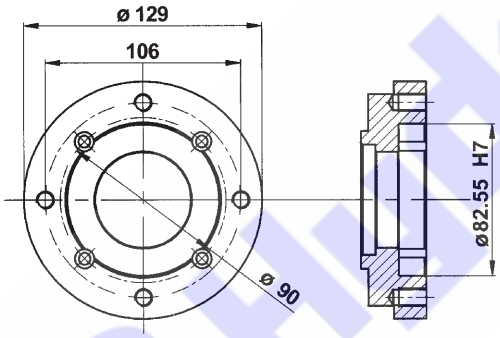


SAE A
30420.3

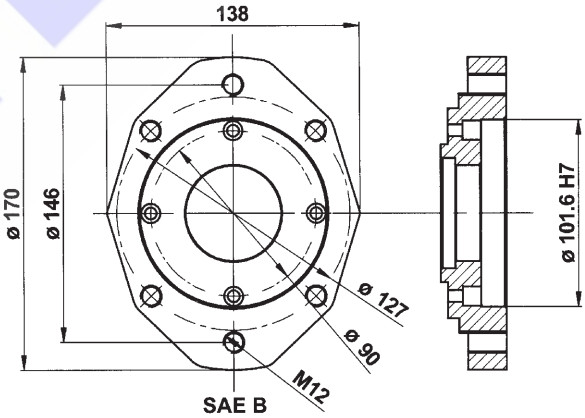


SAE B
30420.1

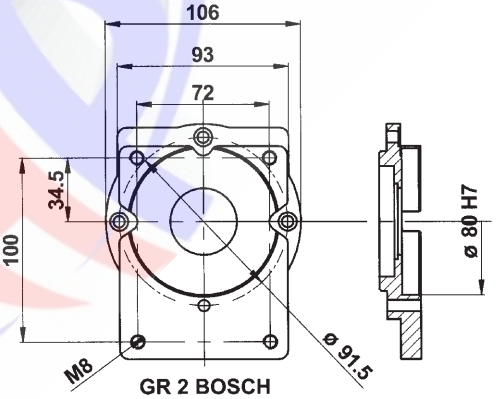


GR 2 BOSCH
30817

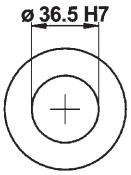


920266

## Flanges for Electromagnetic Clutches 30 daNm

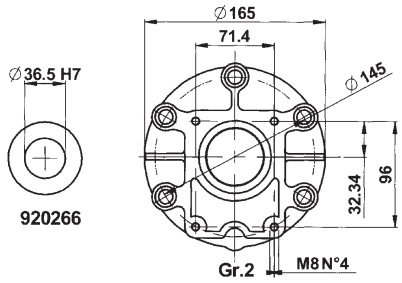

30400

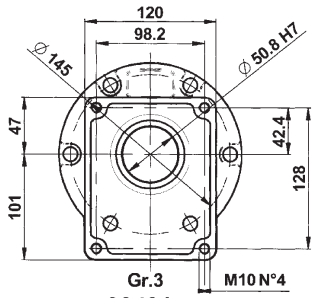

30401

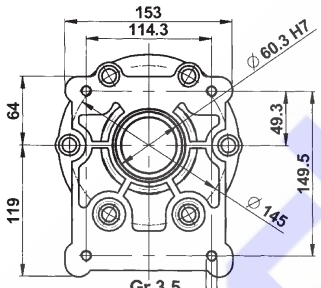

30402

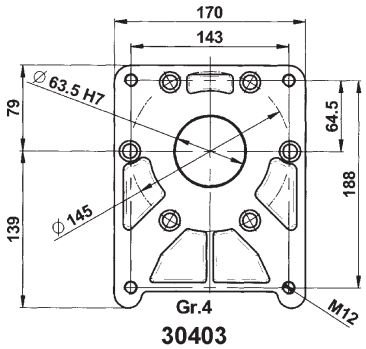

30403

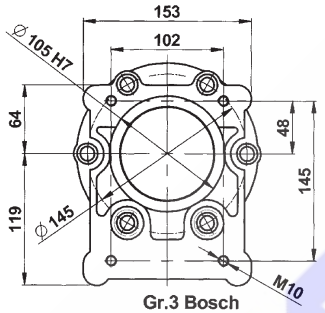

30417

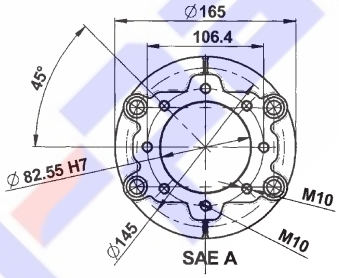

30420

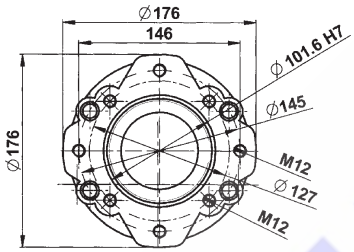

30422

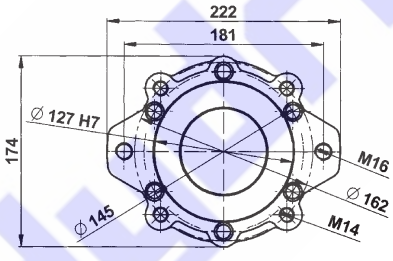

30432

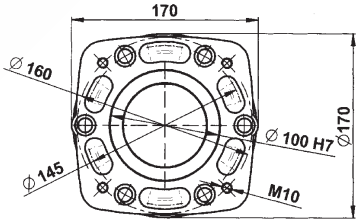

30461

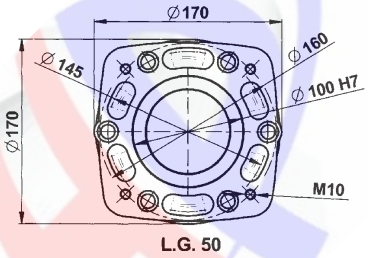

30462

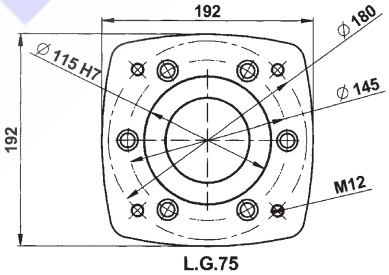

30463

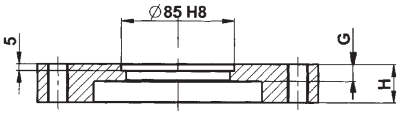

Section for all flanges

| Flange | Type | Gr.2 | Gr.3 | Gr.3.5 | Gr.4 | Gr.3 BOSCH | SAE A | SAE B | SAE C | LG. 20-35 | LG. 50 | LG.75 |
|---|---|---|---|---|---|---|---|---|---|---|---|---|
| | Code | 30400 | 30401 | 30402 | 30403 | 30417 | 30420 | 30422 | 30432 | 30461 | 30462 | 30463 |
| Dimensions | H | 21 | 23 | 24 | 23 | 19 | 25 | 25 | 28 | 34 | 41 | 41 |
| | G | 17 | 21 | 11.5 | 16 | 12 | 21 | 12 | 16 | 25 | 32.5 | 33 |